FXO CoaXPress

fxo542CCX



□□	
□□	fxo542CCX
□□ □□	F002089
□□ □□□	FXO CoaXPress
□□	Available

□□	
□□ □□	Area scan
□□□	Color
□□□□	Visible
□□□□ □□	400 nm to 1000 nm
□□□	5,312 × 3,032 (16.10 MP)
□□ □□	Sony IMX542
□□ □□□□ (□□)	cmos
□□ □□	Global shutter (GS)
□□ □□	14.55 × 8.31 mm (16.76 mm, Type 1.1)
□□ □□	2.74 µm × 2.74 µm

□□ □□	
□□ □□ □□	12-bit, 8-bit
RGB □□ □□	bayer12, bayer8

□□□ □□	
□□□□ □□□	72 dB
SNR	39.1 dB

□□□ □ □□

□□ □□□ □□	45.6 fps
□□ □□	10 µs to 60 s
□□	0.0 dB to 48.0 dB

I/O □ □□

□□□ □□	0 x LVDS input, 0 x LVDS output, 0 x TTL input, 0 x TTL output, 2 x 24V input, 4 x Open drain output,
□□ □□□ □□	1 x RS232 input, 1 x RS232 output, 0 x RS422 input, 0 x RS422 output,
□□□ □□	1 x Optical isolated input, 0 x Optical isolated input,
I/O □□□	12-pin Hirose HR10A-10P-12S
□□ □□ □□	10 to 25VDC, Power over CoaXPress
□□ □□	External: 9 W (typical)

□□ □□

□□ □□	-10 °C to 65 °C (□□□)
Humidity	10 % to 90 % (non-condensing)

□□□ □□

□□ □□ (L x W x H mm)	70 × 50 × 50
□□/□□ □□	IR-Cut - 680nm
IP □□	IP30
□□ □□□	C-Mount
□□	240 g

□□□ □□□ □ FPGA

□□□□ □□□ (□□□)	32 MByte

□□□□□

□□□ □□□□□	cxp-12 with 1 connection
□□□□□ □□□	(micro-BNC)
□□ □□	CoaXPress 2.0

FW □□ - □□□ □□

□□ □□	auto, external, manual

FW □□ - □□□ □□

□□ □□	auto, manual
□□□ □□□ □□	auto, manual
□□□ □□ □□	lut, mirror-image, roi

FW □□ - □□□ □□

□□□ □□/□□□	external, internal, software

Quantum Efficiency

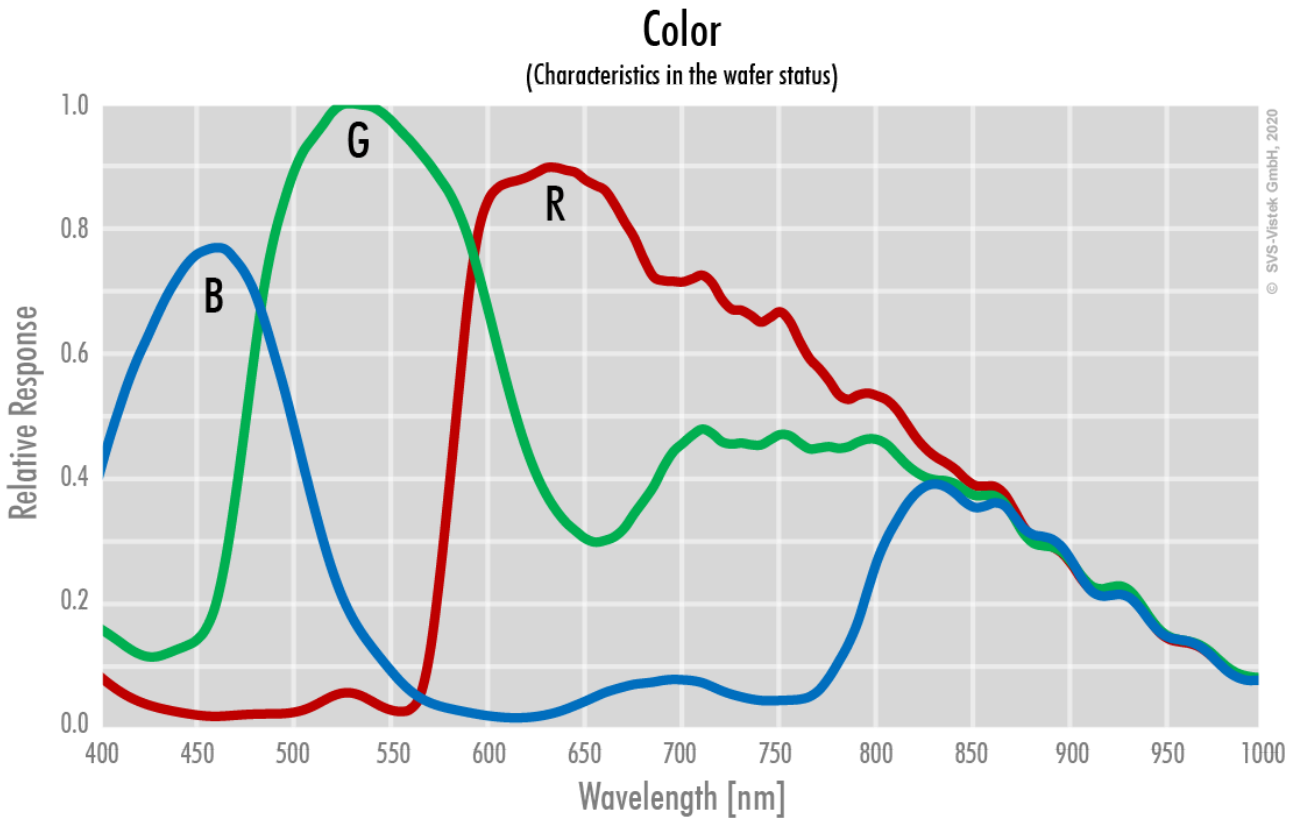

Technical Drawing

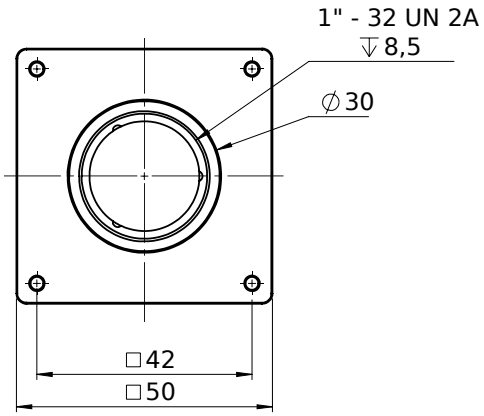

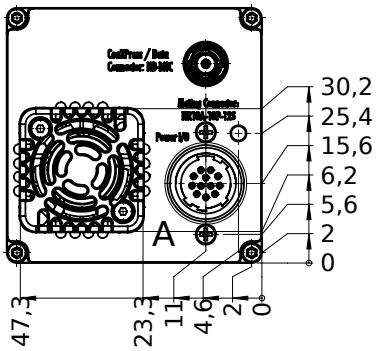

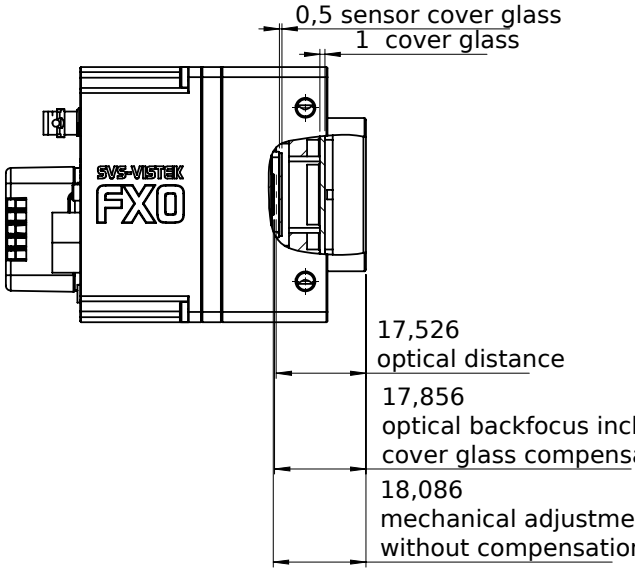

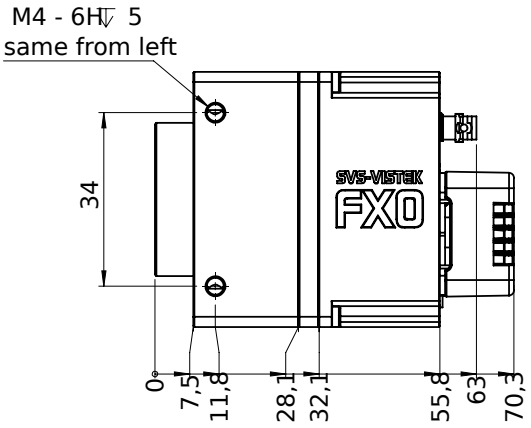

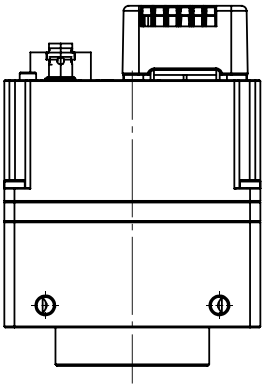

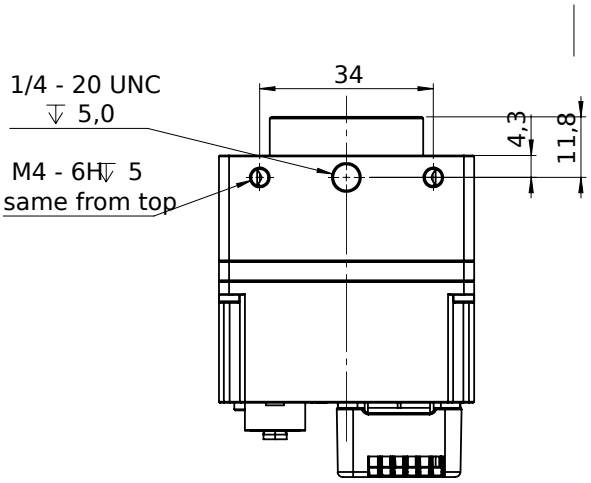

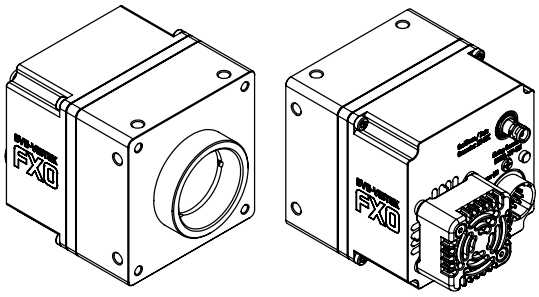

I/O pin assignment

Hirose 12 Pin

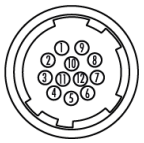

1	VIN –	(GND)
2	VIN +	(10 V to 25 V DC)
3	IN 4	(RXD RS232)
4	OUT 4	(TXD RS232)
5	IN 1	(0 - 24V)
6	IN 2	(0 - 24V)
7	OUT 1	(open drain)
8	OUT 2	(open drain)
9	IN 3 +	(opto In +)
10	IN 3 –	(opto In –)
11	OUT 3	(open drain)
12	OUT 0	(open drain)