

Allied Vision

FXO CoaXPress

fxo542MCX

□반	
모델	fxo542MCX
제품 코드	F002088
제품 시리즈	FXO CoaXPress
상태	Available

센서	
센서 유형	Area scan
크로마	Mono
스펙트럼	Visible
스펙트럼 범위	400 nm to 1000 nm
해상도	5,312 × 3,032 (16.10 MP)
센서 모델	Sony IMX542
센서 아키텍처 (소재)	cmos
셔터 유형	Global shutter (GS)
센서 크기	14.55 × 8.31 mm (16.76 mm, Type 1.1)
픽셀 크기	2.74 µm × 2.74 µm

픽셀 형식	
센서 비트 심도	8-bit, 12-bit
모노크롬 픽셀 형식	mono8, mono12

이미징 성능	
다이나믹 레인지	72 dB
SNR	39.9 dB

□□□ □ □□

□□ □□□ □□	45.6 fps
□□ □□	10 µs to 60 s
□□	0.0 dB to 48.0 dB

I/O □ □□

□□□ □□	0 x LVDS input, 0 x LVDS output, 0 x TTL input, 0 x TTL output, 2 x 24V input, 4 x Open drain output,
□□ □□□ □□	1 x RS232 input, 1 x RS232 output, 0 x RS422 input, 0 x RS422 output,
□□□ □□	1 x Optical isolated input, 0 x Optical isolated input,
I/O □□□	12-pin Hirose HR10A-10P-12S
□□ □□ □□	10 to 25VDC, Power over CoaXPress
□□ □□	External: 9 W (typical)

□□ □□

□□ □□ (□□□)	-10 °C to 65 °C

□□□ □□

□□ □□ (L x W x H mm)	70 × 50 × 50
□□/□□ □□	K9 - AR coating - 400-850nm
IP □□	IP30
□□ □□□	C-Mount
□□	240 g

□□□ □□□ □ FPGA

□□□□ □□□ (□□□)	32 MByte

□□□□□

□□□ □□□□□	cxp-12 with 1 connection
□□□□□ □□□	(micro-BNC)
□□ □□	CoaXPress 2.0

FW □□ - □□□ □□

□□ □□	manual, auto, external
□□ □□	auto, manual

FW □□ - □□□ □□

□□□ □□ □□	roi, lut, mirror-image, dpc, shading-correction, ffc

FW □□ - □□□ □□

□□□ □□/□□□	internal, software, external
□□□ □□ □□	PoCxP, User Sets, PWM(4), Sequencer,

Quantum Efficiency

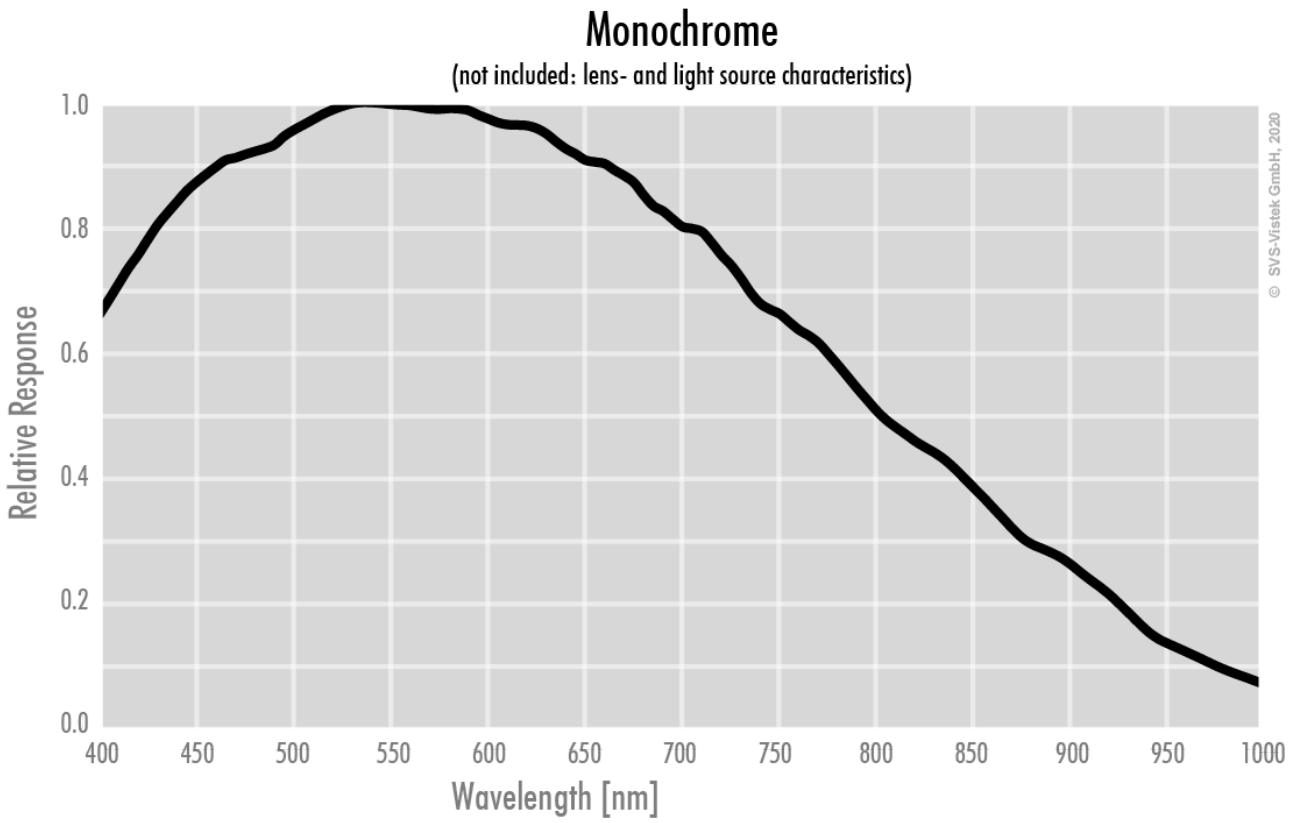

Technical Drawing

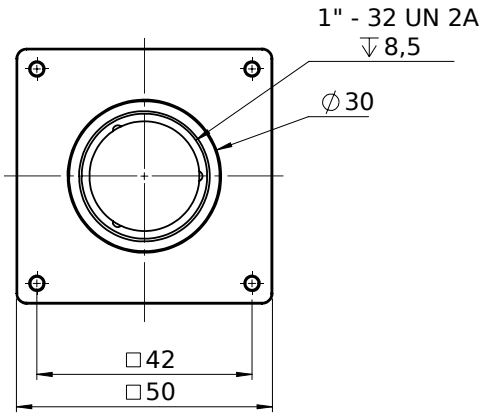

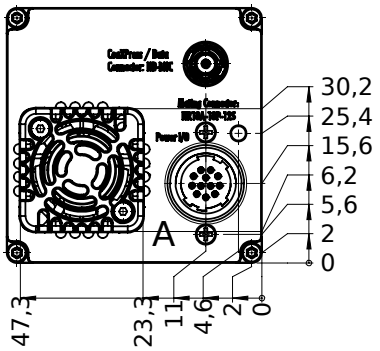

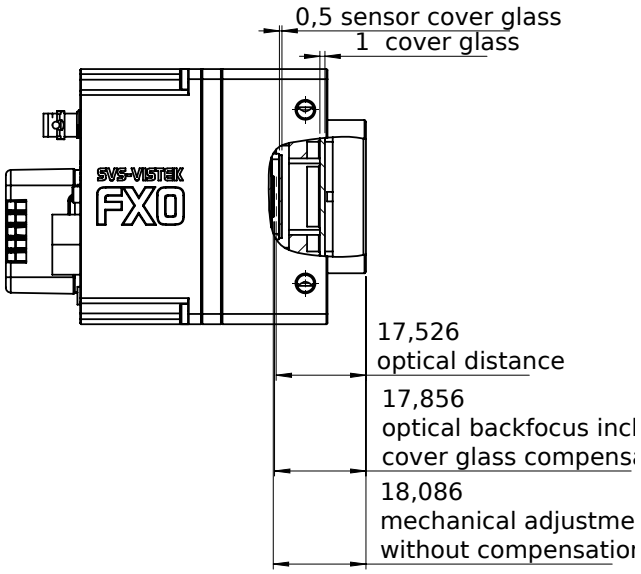

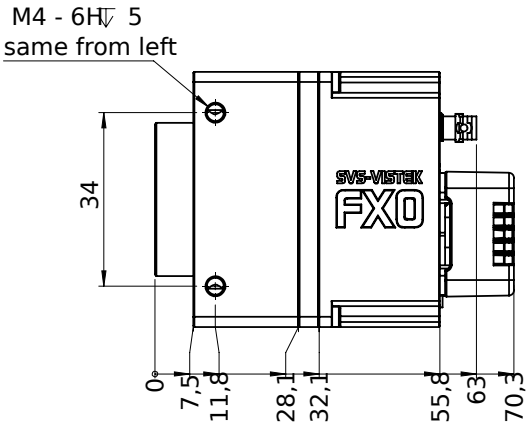

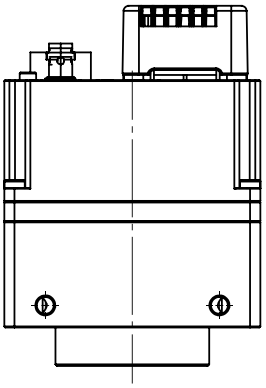

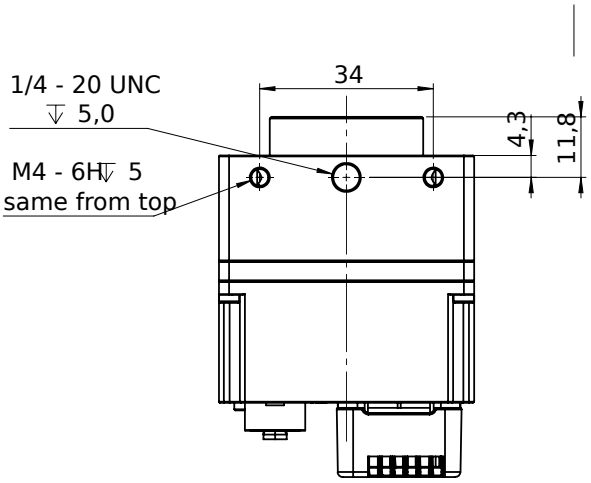

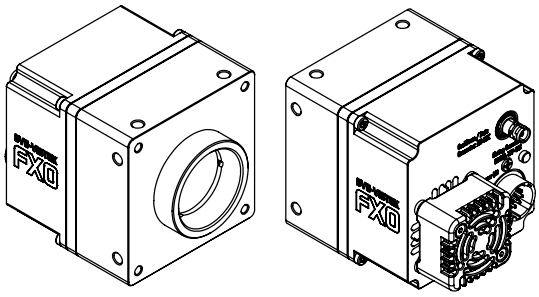

I/O pin assignment

Hirose 12 Pin

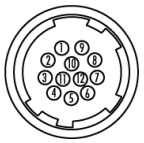

1	VIN –	(GND)	7	OUT 1	(open drain)
2	VIN +	(10 V to 25 V DC)	8	OUT 2	(open drain)
3	IN 4	(RXD RS232)	9	IN 3 +	(opto In +)
4	OUT 4	(TXD RS232)	10	IN 3 –	(opto In –)
5	IN 1	(0 - 24V)	11	OUT 3	(open drain)
6	IN 2	(0 - 24V)	12	OUT 0	(open drain)