

Allied Vision

FXO 10GigE

fxo540MXGE

일반	
모델	fxo540MXGE
제품 코드	F002090
제품 시리즈	FXO 10GigE
상태	Available

센서	
센서 유형	Area scan
크로마	Mono
스펙트럼	Visible
스펙트럼 범위	400 nm to 1000 nm
해상도	5,320 × 4,600 (24.50 MP)
센서 모델	Sony IMX540
센서 아키텍처 (소재)	cmos
셔터 유형	Global shutter (GS)
센서 크기	14.58 × 12.6 mm (19.27 mm, Type 1.2)
픽셀 크기	2.74 µm × 2.74 µm

픽셀 형식	
센서 비트 심도	8-bit, 12-bit
모노크롬 픽셀 형식	mono8, mono12

이미징 성능	
다이나믹 레인지	72 dB
SNR	39.11 dB

□□□ □ □□

□□ □□□ □□	30.4 fps
□□ □□	9 µs to 60 s
□□	0.0 dB to 48.0 dB

I/O □ □□

□□□ □□	0 x LVDS input, 0 x LVDS output, 0 x TTL input, 0 x TTL output, 2 x 24V input, 4 x Open drain output,
□□ □□□ □□	1 x RS232 input, 1 x RS232 output, 0 x RS422 input, 0 x RS422 output,
□□□ □□	1 x Optical isolated input, 0 x Optical isolated input,
I/O □□□	12-pin Hirose HR10A-10P-12S
□□ □□ □□	10 to 25VDC, Power over Ethernet
□□ □□	External: 10 W (typical)

□□ □□

□□ □□ (□□□)	-10 °C to 60 °C

□□□ □□

□□ □□ (L x W x H mm)	76 × 50 × 50
□□/□□ □□	K9 - AR coating - 400-850nm
IP □□	IP30
□□ □□□	C-Mount
□□	240 g

□□□ □□□ □ FPGA

□□□ □□ (RAM)	896 MByte
□□□□ □□□ (□□□)	32 MByte

□□□□□

□□□ □□□□□	10gige
□□□□□ □□□	(RJ-45)
□□ □□	GigE Vision 2.0

FW □□ - □□□ □□

□□ □□	manual, auto, external

FW □□ - □□□ □□

□□ □□	auto, manual
□□□ □□ □□	roi, lut, mirror-image, dpc, shading-correction, ffc

FW □□ - □□□ □□

□□□ □□/□□□	internal, software, external
□□□ □□ □□	PTP, User Sets, POE, PWM(4), Sequencer,

Quantum Efficiency

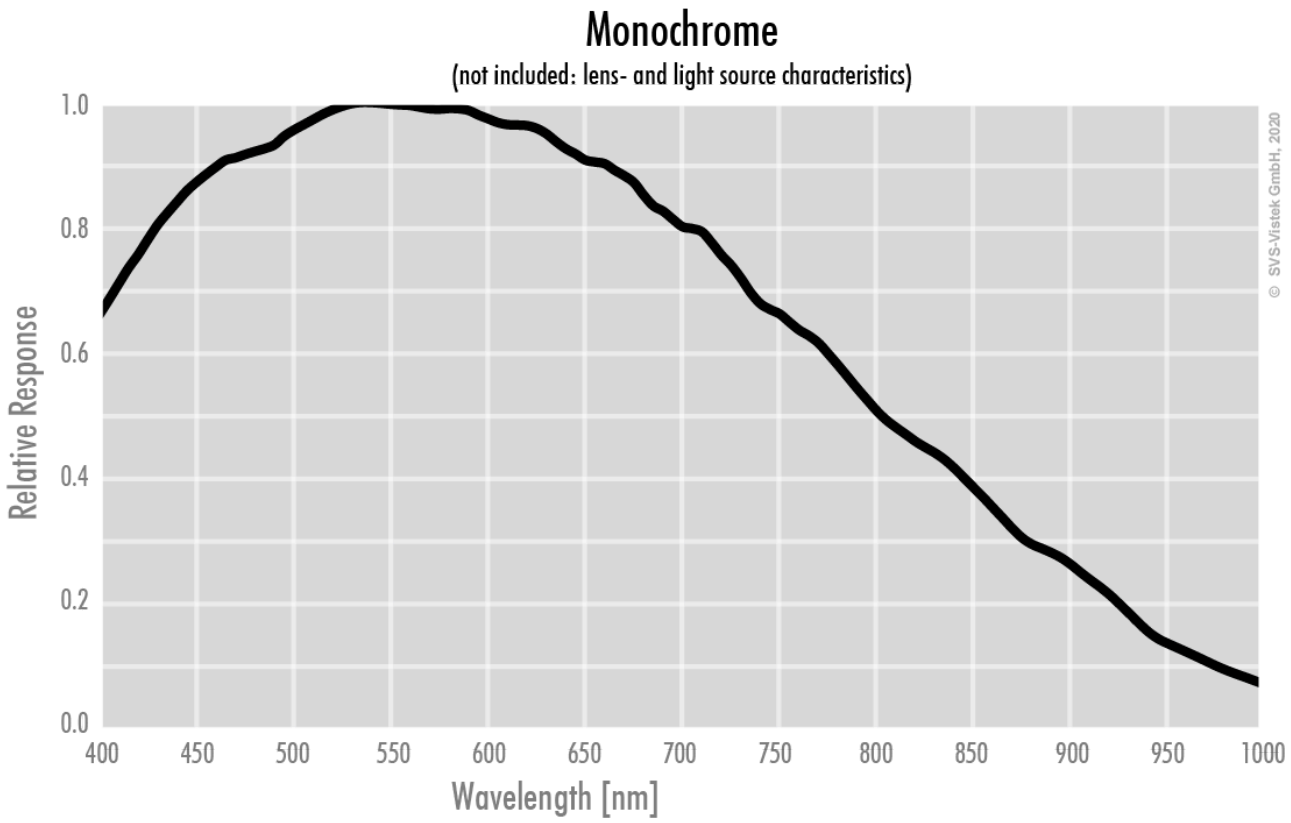

Technical Drawing

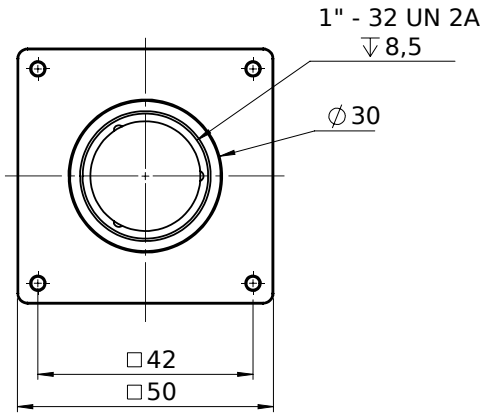

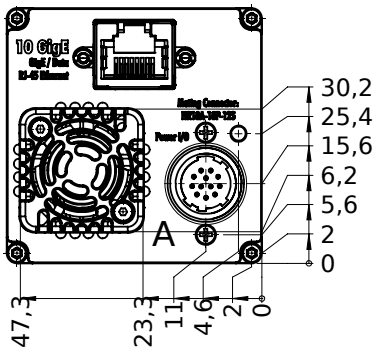

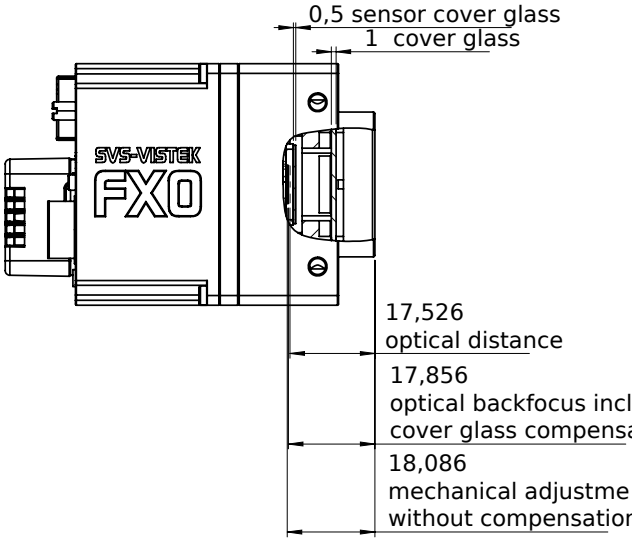

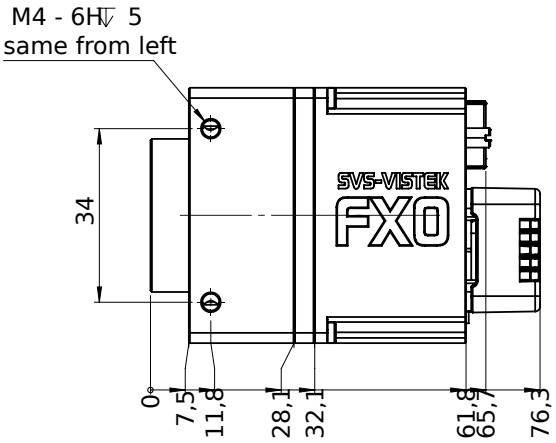

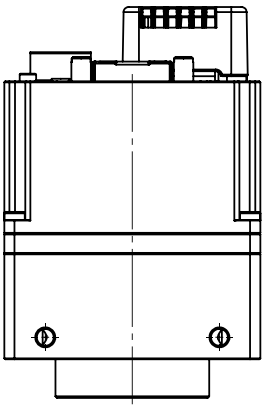

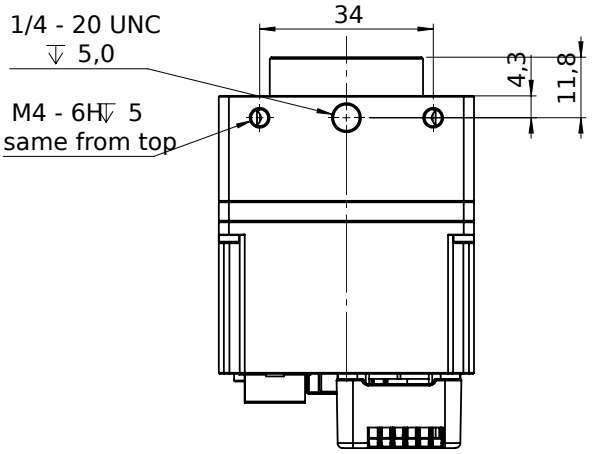

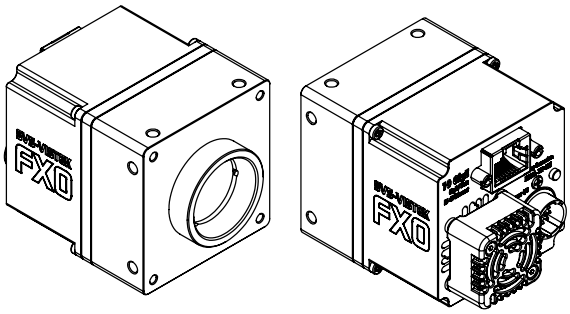

I/O pin assignment

Hirose 12 Pin

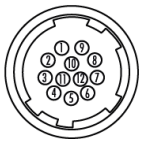

1	VIN –	(GND)	7	OUT 1	(open drain)
2	VIN +	(10 V to 25 V DC)	8	OUT 2	(open drain)
3	IN 4	(RXD RS232)	9	IN 3 +	(opto In +)
4	OUT 4	(TXD RS232)	10	IN 3 –	(opto In –)
5	IN 1	(0 - 24V)	11	OUT 3	(open drain)
6	IN 2	(0 - 24V)	12	OUT 0	(open drain)