

Allied Vision

EXO USB3

exo4000MU3

반	
모델	exo4000MU3
제품 코드	F001627
제품 시리즈	EXO USB3
상태	Available

센서	
센서 유형	Area scan
크로마	Mono
스펙트럼	Visible
스펙트럼 범위	400 nm to 1000 nm
해상도	2,048 × 2,048 (4.00 MP)
센서 모델	CMOSIS/ams CMV4000
센서 아키텍처 (소재)	cmos
셔터 유형	Global shutter (GS)
센서 크기	11.26 × 11.26 mm (15.93 mm, Type 1)
픽셀 크기	5.50 µm × 5.50 µm

픽셀 형식	
센서 비트 심도	8-bit, 12-bit
모노크롬 픽셀 형식	mono8, mono12packed

이미징 성능	
다이나믹 레인지	52 dB
SNR	38 dB

□□□ □ □□

□□ □□□ □□	74 fps
□□ □□	27 µs to 10 s
□□	0.0 dB to 11.0 dB

I/O □ □□

□□□ □□	0 x LVDS input, 0 x LVDS output, 0 x TTL input, 0 x TTL output, 2 x 24V input, 4 x Open drain output,
□□ □□□ □□	1 x RS232 input, 1 x RS232 output, 0 x RS422 input, 0 x RS422 output,
□□□ □□	1 x Optical isolated input, 0 x Optical isolated input,
I/O □□□	12-pin Hirose HR10A-10P-12S
□□ □□ □□	10 to 25VDC
□□ □□	External: 4.5 W (typical)

□□□ □□

□□ □□ (L x W x H mm)	47 × 50 × 50
□□/□□ □□	K9 - AR coating - 400-850nm
IP □□	IP40
□□ □□□	C-Mount
□□	138 g

□□□ □□□ □ FPGA

□□□ □□ (RAM)	192 MByte
□□□□ □□□ (□□□)	32 MByte

□□□□□

□□□ □□□□□	usb3.0
□□□□□ □□□	(Micro-B)
□□ □□	USB3 Vision

FW □□ - □□□ □□

□□ □□	manual, auto, external
□□ □□	auto, manual
□□□ □□ □□	roi, lut, mirror-image, dpc, shading-correction

Allied Vision

FW □□ - □□□ □□

□□□ □□/□□□	internal, software, external
□□□ □□ □□	User Sets, PWM(4), Sequencer,

Quantum Efficiency

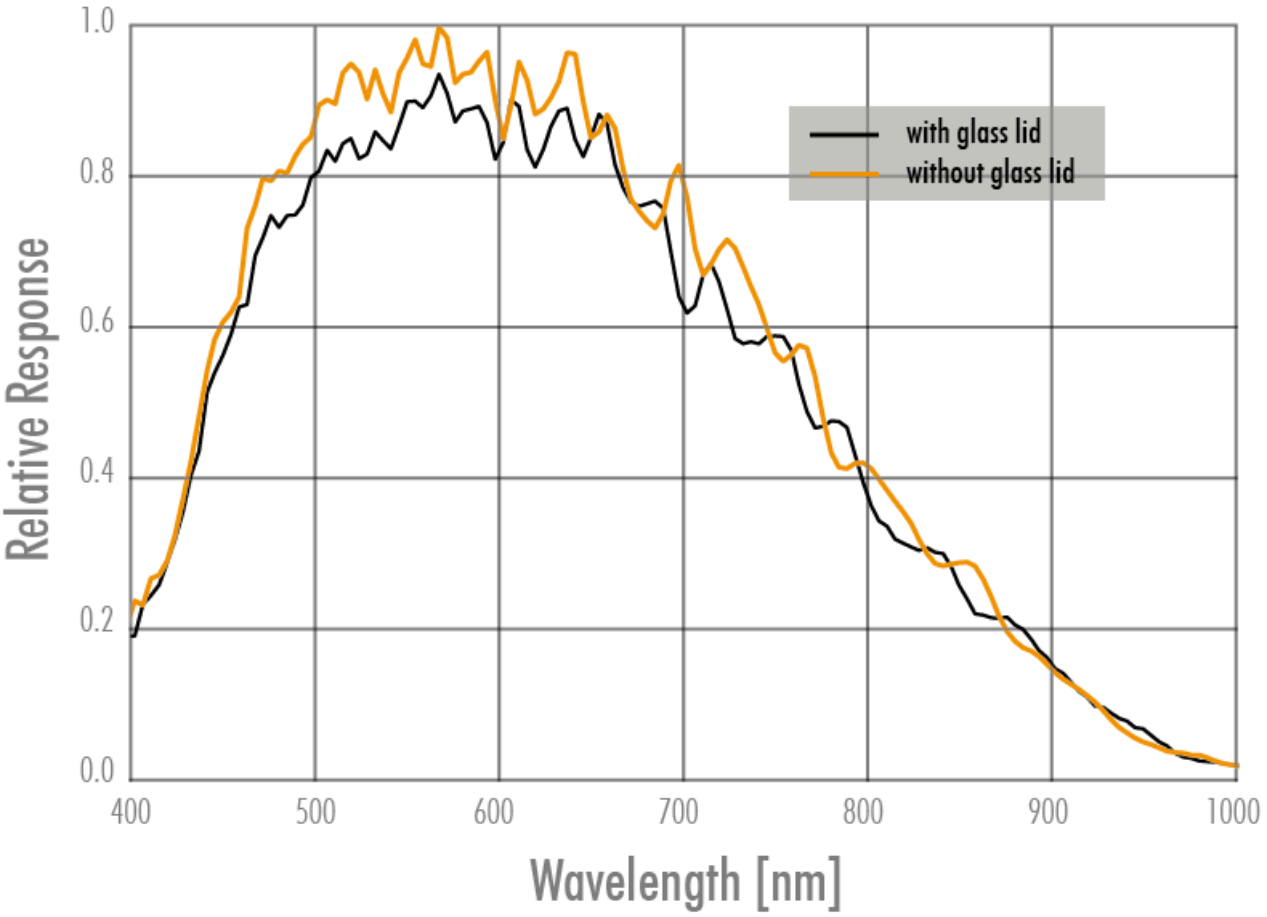

Allied Vision

Technical Drawing

front

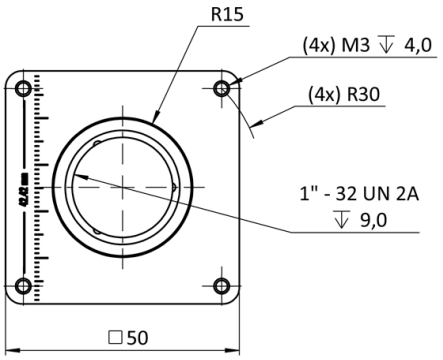

back

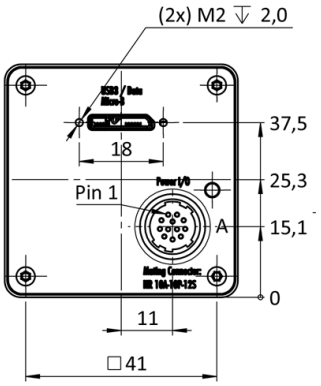

cross section

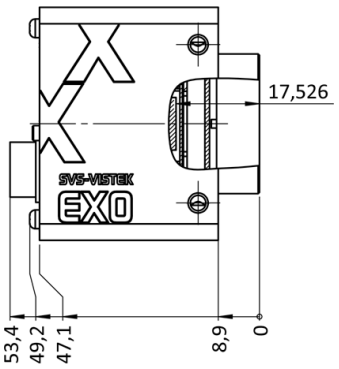

right side

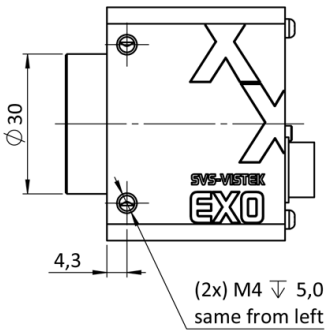

top

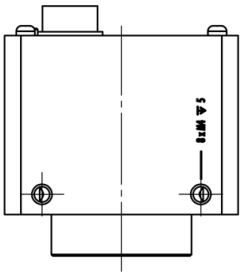

bottom

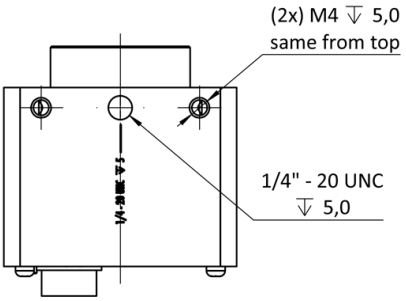

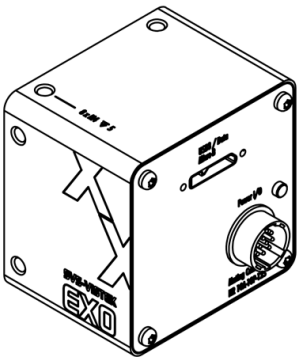

I/O pin assignment

Hirose 12 Pin

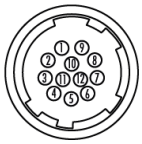

1	VIN –	(GND)	7	OUT 1	(open drain)
2	VIN +	(10 V to 25 V DC)	8	OUT 2	(open drain)
3	IN 4	(RXD RS232)	9	IN 3 +	(opto In +)
4	OUT 4	(TXD RS232)	10	IN 3 –	(opto In –)
5	IN 1	(0 - 24V)	11	OUT 3	(open drain)
6	IN 2	(0 - 24V)	12	OUT 0	(open drain)