EXO GigE

exo547CGE



□□	
□□	exo547CGE
□□ □□	F002175
□□ □□□	EXO GigE
□□	Available

□□	
□□ □□	Area scan
□□□	Color
□□□□	Visible
□□□□ □□	400 nm to 1000 nm
□□□	2,448 × 2,048 (5.00 MP)
□□ □□	Sony IMX547
□□ □□□□ (□□)	cmos
□□ □□	Global shutter (GS)
□□ □□	6.71 × 5.61 mm (8.75 mm, Type 1/1.8)
□□ □□	2.74 µm × 2.74 µm

□□ □□	
□□ □□ □□	8-bit, 12-bit
RGB □□ □□	bayer8, bayer12packed

□□□ □□	
□□□□ □□□	72 dB
SNR	39 dB

□□□ □ □□

□□ □□□ □□	24.5 fps
□□ □□	28 µs to 60 s
□□	0.0 dB to 48.0 dB

I/O □ □□

□□□ □□	0 x LVDS input, 0 x LVDS output, 0 x TTL input, 0 x TTL output, 2 x 24V input, 4 x Open drain output,
□□ □□□ □□	1 x RS232 input, 1 x RS232 output, 0 x RS422 input, 0 x RS422 output,
□□□ □□	1 x Optical isolated input, 0 x Optical isolated input,
I/O □□□	12-pin Hirose HR10A-10P-12S
□□ □□ □□	10 to 25VDC, Power over Ethernet
□□ □□	External: 4.5 W (typical)

□□ □□

□□ □□	-10 °C to 60 °C (□□□)

□□□ □□

□□ □□ (L x W x H mm)	43 × 50 × 50
□□/□□ □□	IR-Cut - 680nm
IP □□	IP40
□□ □□□	C-Mount
□□	143 g

□□□ □□□ □ FPGA

□□□ □□ (RAM)	192 MByte
□□□□ □□□ (□□□)	32 MByte

□□□□□

□□□ □□□□□	gige
□□□□□ □□□	(RJ-45)
□□ □□	GigE Vision

FW □□ - □□□ □□

□□ □□	manual, auto, external

FW □□ - □□□ □□

□□ □□	auto, manual
□□□ □□□ □□	auto, manual
□□□ □□ □□	roi, lut, color-transformation, mirror-image, dpc, shading-correction, ffc

FW □□ - □□□ □□

□□□ □□/□□□	internal, software, external
□□□ □□ □□	PTP, User Sets, POE, PWM(4), Sequencer,

Quantum Efficiency

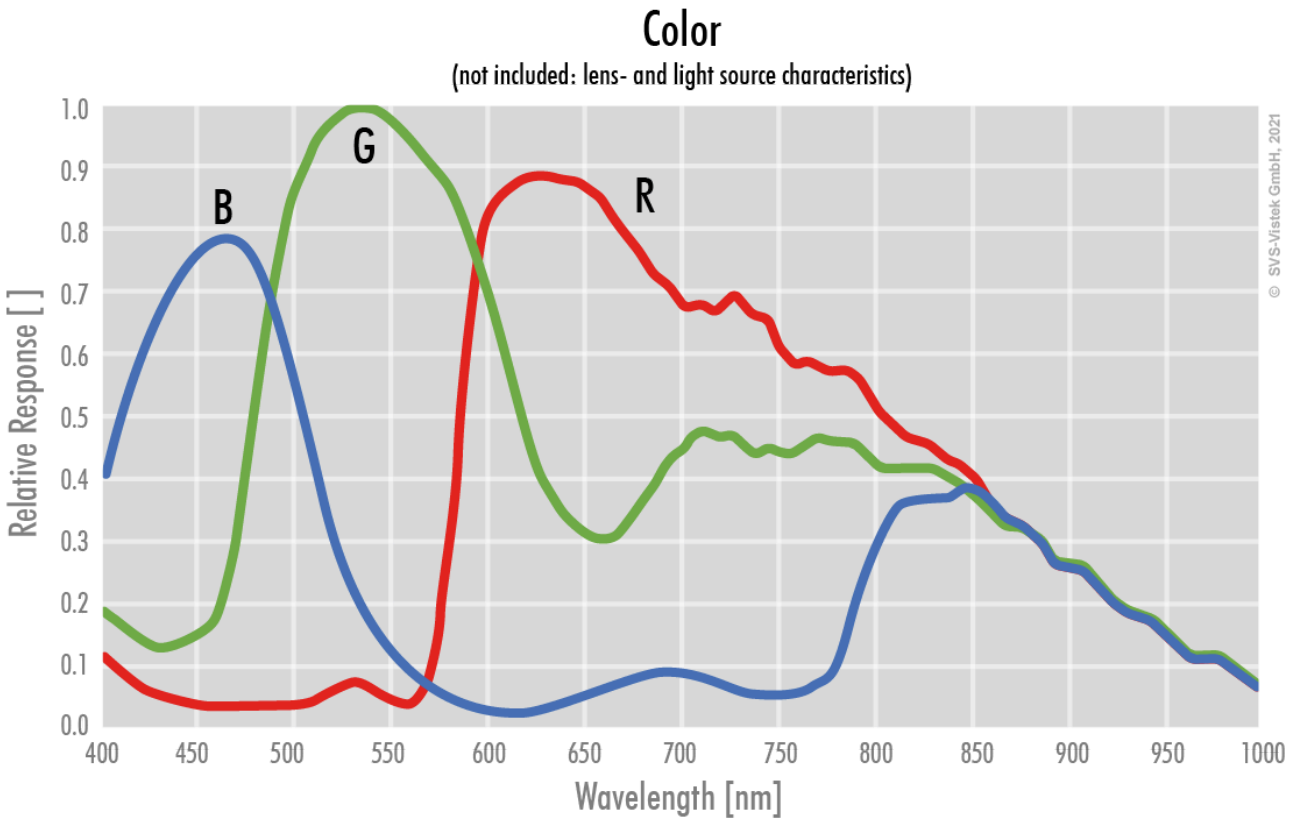

Allied Vision

Technical Drawing

front

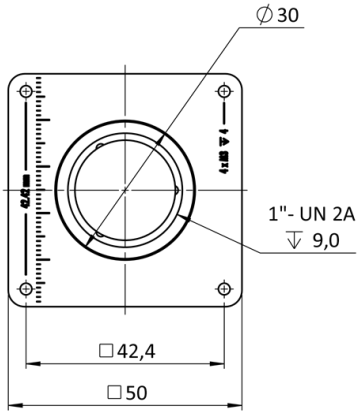

back

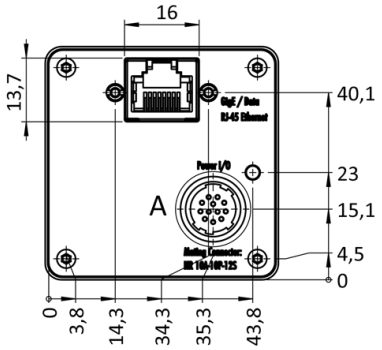

cross section

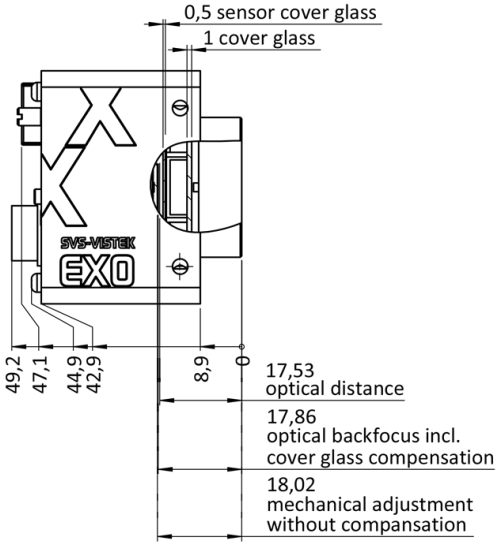

right side

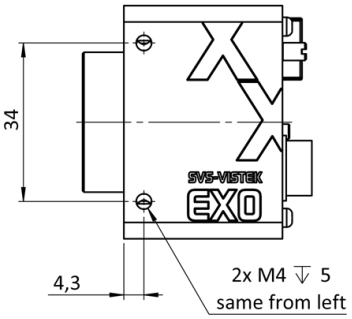

top

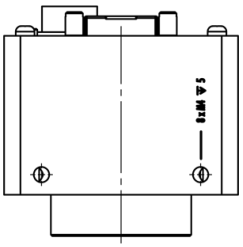

bottom

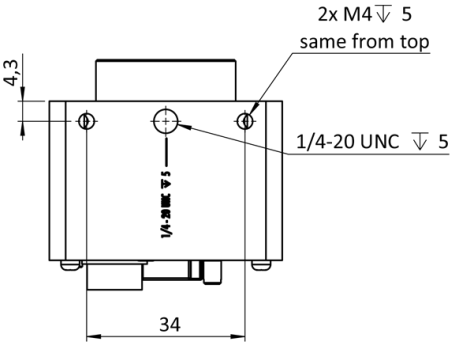

3D

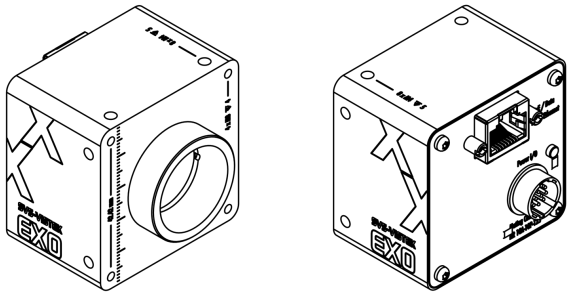

I/O pin assignment

Hirose 12 Pin

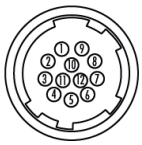

1	VIN –	(GND)
2	VIN +	(10 V to 25 V DC)
3	IN 4	(RXD RS232)
4	OUT 4	(TXD RS232)
5	IN 1	(0 - 24V)
6	IN 2	(0 - 24V)
7	OUT 1	(open drain)
8	OUT 2	(open drain)
9	IN 3 +	(opto In +)
10	IN 3 –	(opto In –)
11	OUT 3	(open drain)
12	OUT 0	(open drain)