EXO GigE

exo367CGE



□□	
□□	exo367CGE
□□ □□	F002199
□□ □□□	EXO GigE
□□	Available

□□	
□□ □□	Area scan
□□□	Color
□□□□	Visible
□□□□ □□	400 nm to 1000 nm
□□□	4,416 × 4,428 (19.60 MP)
□□ □□	Sony IMX367
□□ □□□□ (□□)	cmos
□□ □□	Global shutter (GS)
□□ □□	15.24 × 15.28 mm (21.58 mm, Type 4/3)
□□ □□	3.45 µm × 3.45 µm

□□ □□	
□□ □□ □□	8-bit, 12-bit
RGB □□ □□	bayer8, bayer12packed

□□□ □ □□	
□□ □□□ □□	6.2 fps
□□ □□	26 µs to 60 s
□□	0.0 dB to 48.0 dB

I/O 및 □□

□□□ □□	0 x LVDS input, 0 x LVDS output, 0 x TTL input, 0 x TTL output, 2 x 24V input, 4 x Open drain output,
□□ □□□ □□	1 x RS232 input, 1 x RS232 output, 0 x RS422 input, 0 x RS422 output,
□□□ □□	1 x Optical isolated input, 0 x Optical isolated input,
I/O □□□	12-pin Hirose HR10A-10P-12S
□□ □□ □□	10 to 25VDC, Power over Ethernet
□□ □□	External: 5.5 W (typical)

□□ □□

□□ □□	-10 °C to 65 °C (□□□)

□□□ □□

□□ □□ (L x W x H mm)	46 × 58 × 58
□□/□□ □□	K9 - AR coating
IP □□	IP40
□□ □□□	M42
□□	400 g

□□□ □□□ 및 FPGA

□□□ □□ (RAM)	192 MByte
□□□□ □□□ (□□□)	32 MByte

□□□□

□□□ □□□□□	gige
□□□□□ □□□	(RJ-45)
□□ □□	GigE Vision

FW □□ - □□□ □□

□□ □□	manual, auto, external
□□ □□	auto, manual
□□□ □□□ □□	auto, manual
□□□ □□ □□	roi, lut, color-transformation, mirror-image, dpc, shading-correction, ffc

FW □□ - □□□ □□

□□□ □□/□□□	internal, software, external
□□□ □□ □□	PTP, User Sets, POE, PWM(4), Sequencer,

Quantum Efficiency

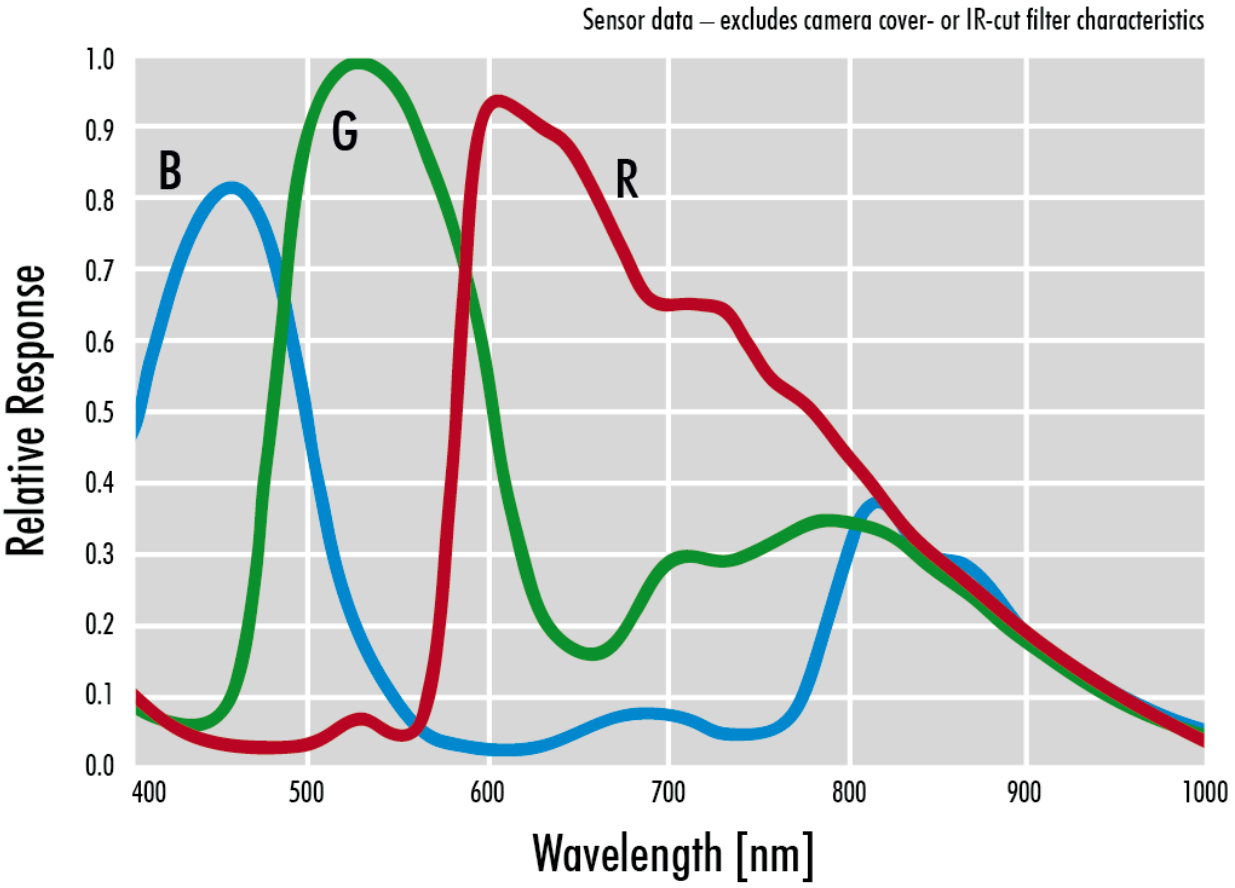

Allied Vision

Technical Drawing

front

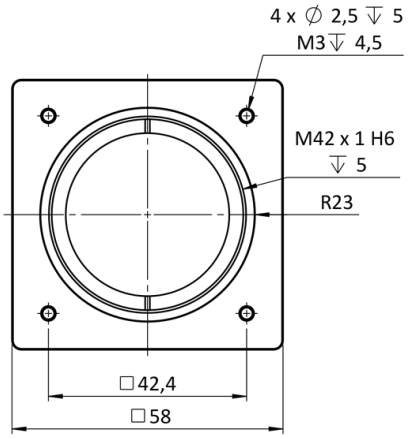

back

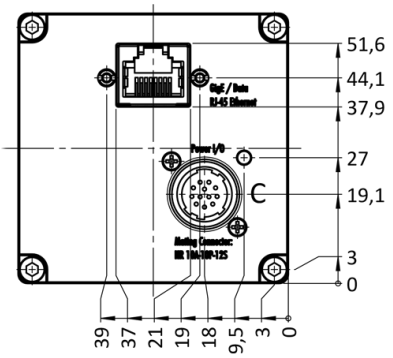

cross section

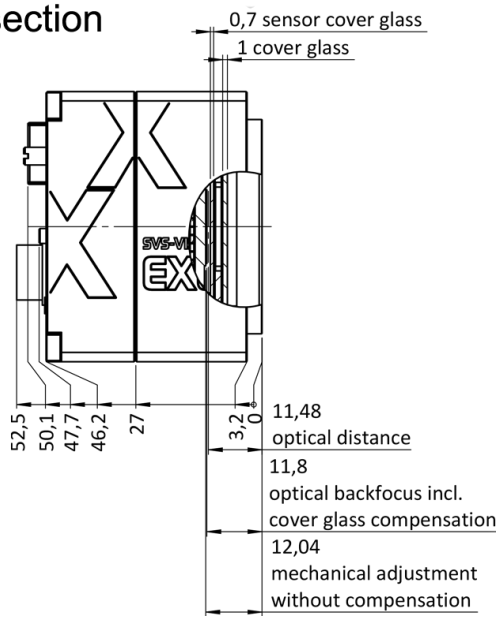

right side

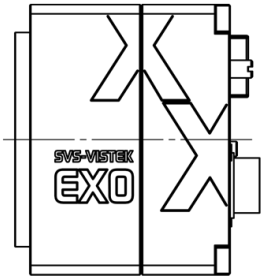

top

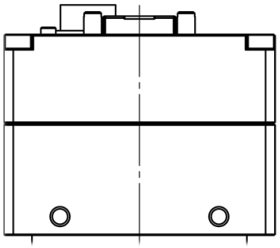

bottom

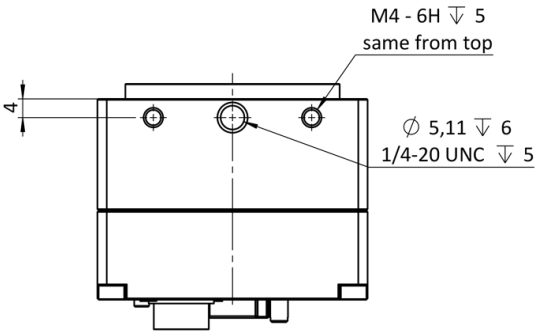

3D

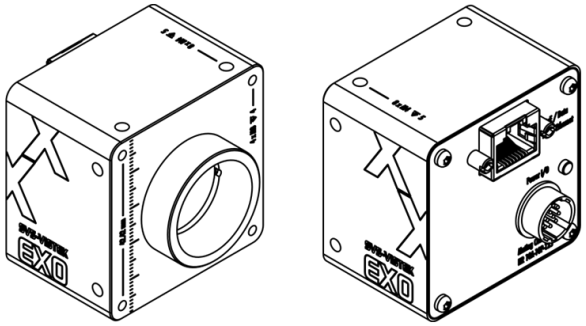

I/O pin assignment

Hirose 12 Pin

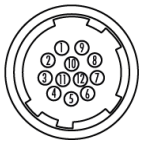

1	VIN –	(GND)	7	OUT 1	(open drain)
2	VIN +	(10 V to 25 V DC)	8	OUT 2	(open drain)
3	IN 4	(RXD RS232)	9	IN 3 +	(opto In +)
4	OUT 4	(TXD RS232)	10	IN 3 –	(opto In –)
5	IN 1	(0 - 24V)	11	OUT 3	(open drain)
6	IN 2	(0 - 24V)	12	OUT 0	(open drain)