EXO Tracer

exo183MGETR

□□

□□	exo183MGETR
□□ □□	F002208
□□ □□□	EXO Tracer
□□	Available

□□

□□ □□	Area scan
□□□	Mono
□□□□	Visible
□□□□ □□	400 nm to 1000 nm
□□□	5,496 × 3,672 (20.20 MP)
□□ □□	Sony IMX183
□□ □□□□ (□□)	cmos
□□ □□	Rolling shutter (RS)
□□ □□	13.19 × 8.81 mm (15.86 mm, Type 1)
□□ □□	2.40 µm × 2.40 µm

□□ □□

□□ □□ □□	8-bit, 12-bit
□□□□ □□ □□	mono8, mono12packed

□□□ □□

□□□□ □□□	71.5 dB
SNR	40 dB

□□□ □ □□

□□ □□□ □□	6 fps
□□ □□□ □□ (□□□)	16 fps
□□ □□	30 µs to 60 s
□□	0.0 dB to 27.0 dB

I/O 및 □□

□□□ □□	0 x LVDS input, 0 x LVDS output, 0 x TTL input, 0 x TTL output, 2 x 24V input, 4 x Open drain output,
□□ □□□ □□	1 x RS232 input, 1 x RS232 output, 0 x RS422 input, 0 x RS422 output,
□□□ □□	1 x Optical isolated input, 0 x Optical isolated input,
I/O □□□	12-pin Hirose HR10A-10P-12S
□□ □□ □□	10 to 25VDC, Power over Ethernet
□□ □□	External: 7 W (typical)

□□ □□

□□ □□	-10 °C to 60 °C (□□□)

□□□ □□

□□ □□ (L x W x H mm)	45 × 58 × 58
□□/□□ □□	K9 - AR coating - 400-850nm
IP □□	IP40
□□ □□□	MFT
□□	320 g

□□□ □□□ 및 FPGA

□□□ □□ (RAM)	192 MByte
□□□□ □□□ (□□□)	32 MByte

□□□□

□□□ □□□□□	gige
□□□□□ □□□	(RJ-45)
□□ □□	GigE Vision

FW □□ - □□□ □□

□□ □□	manual, auto
□□ □□	auto, manual
□□□ □□ □□	roi, lut, mirror-image, dpc

FW □□ - □□□ □□

□□□ □□/□□□	internal, software, external

FW □□ - □□□ □□

□□□ □□ □□	BurstMode, User Sets, POE, PWM(4), Sequencer,

Quantum Efficiency

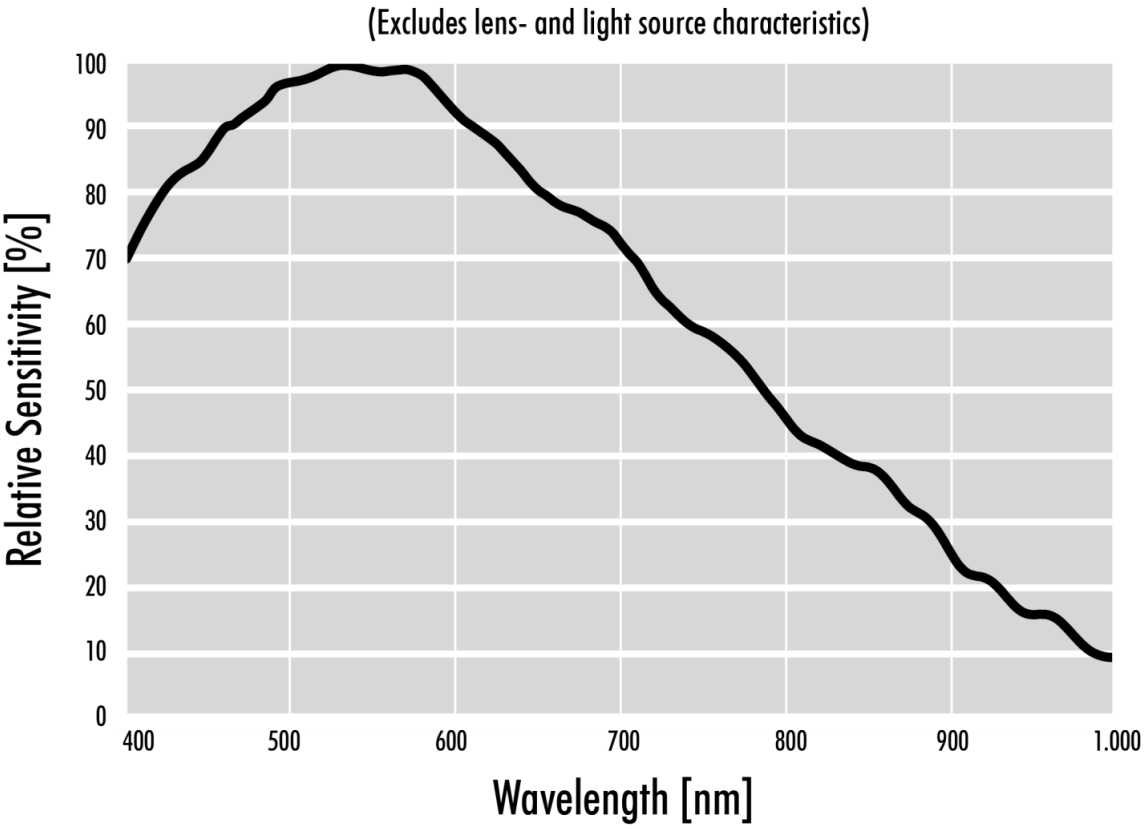

Technical Drawing

front

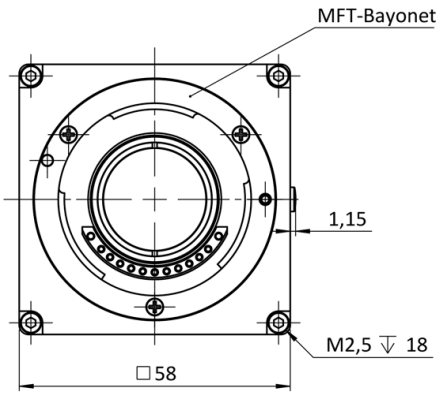

back

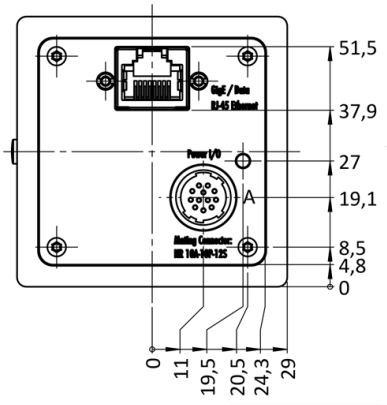

cross section

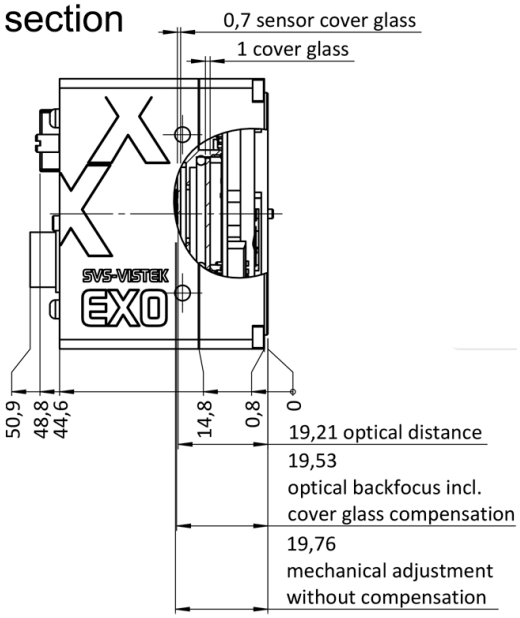

right side

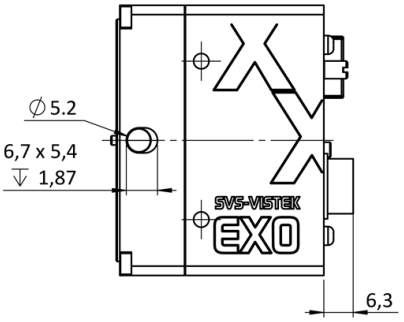

top

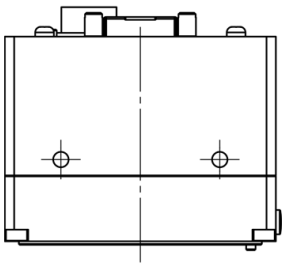

bottom

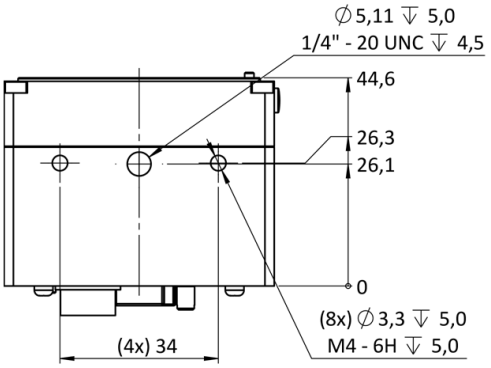

3D

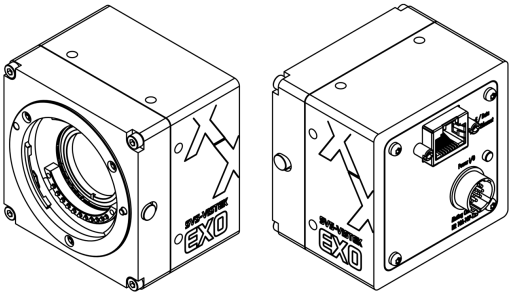

I/O pin assignment

Hirose 12 Pin

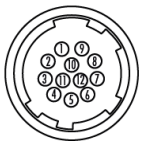

1	VIN –	(GND)
2	VIN +	(10 V to 25 V DC)
3	IN 4	(RXD RS232)
4	OUT 4	(TXD RS232)
5	IN 1	(0 - 24V)
6	IN 2	(0 - 24V)
7	OUT 1	(open drain)
8	OUT 2	(open drain)
9	IN 3 +	(opto In +)
10	IN 3 –	(opto In –)
11	OUT 3	(open drain)
12	OUT 0	(open drain)