

EoSens CoaXPress-12

EoSens1.1CCX12-FM

□□	
□□	EoSens1.1CCX12-FM
□□ □□	F006004
□□ □□□	EoSens CoaXPress-12
□□	Available

□□	
□□ □□	Area scan
□□□	Color
□□□□	Visible
□□□□ □□	400 nm to 1000 nm
□□□	1,280 × 864 (1.10 MP)
□□ □□	Luxima LUX13HS
□□ □□□□ (□□)	cmos
□□ □□	Global shutter (GS)
□□ □□	17.54 × 11.84 mm (21.16 mm, Type 4/3)
□□ □□	13.70 µm × 13.70 µm

□□ □□	
□□ □□ □□	8-bit, 10-bit
RGB □□ □□	bayer8, bayer10

□□□ □ □□	
□□ □□□ □□	3674 fps
□□ □□□ □□ ROI □□	1280 x 864 | 3674 fps, 1280 x 768 | 4151 fps, 640 x 480 | 6576 fps, 128 x 128 | 23821 fps, x | 224673 fps,
□□ □□	2 µs to 1 s
□□	0.0 dB to 18.0 dB

I/O □ □□

□□□ □□	0 x LVDS input, 0 x LVDS output, 0 x TTL input, 0 x TTL output, 2 x 24V input, 0 x Open drain output,
□□ □□□ □□	0 x RS232 input, 0 x RS232 output, 0 x RS422 input, 0 x RS422 output,
□□□ □□	0 x Optical isolated input, 0 x Optical isolated input,
I/O □□□	12-pin Hirose HR10A-10P-12S
□□ □□ □□	12 to 24VDC, Power over CoaXPress
□□ □□	External: 14 W (typical)

□□ □□

□□ □□	-10 °C to 45 °C (□□, □□ □□)

□□□ □□

□□ □□ (L x W x H mm)	83 × 80 × 80
IP □□	IP30
□□ □□□	F-Mount
□□	550 g

□□□□□

□□□ □□□□□□	cxp-12 with 4 connections
□□□□□ □□□	(micro-BNC)
□□ □□	CoaXPress 2.0

FW □□ - □□□ □□

□□ □□	external
□□ □□	digital, analog
□□□ □□□ □□	true
□□□ □□ □□	roi, mirror-image

FW □□ - □□□ □□

□□□ □□/□□□	external, trigger-over-cxp

Quantum Efficiency

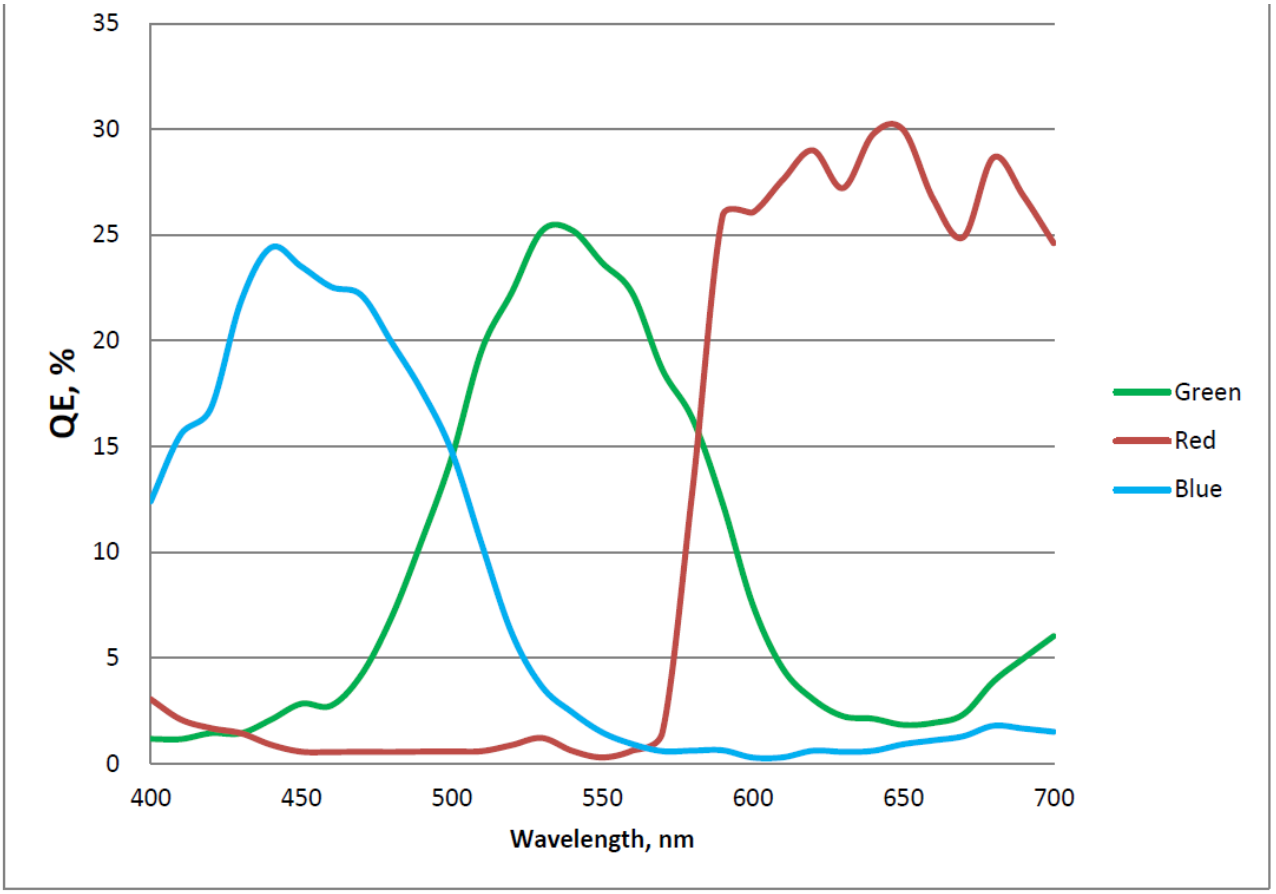

Technical Drawing

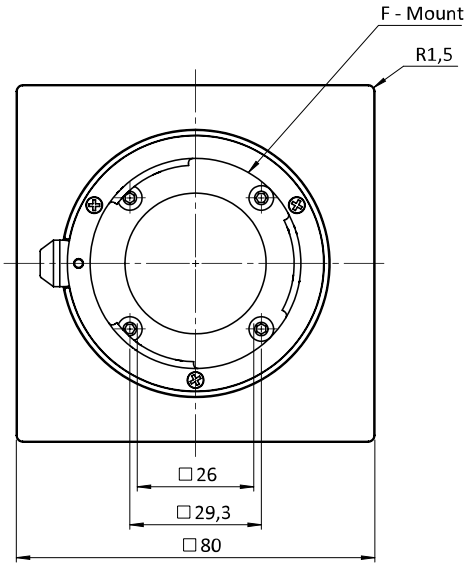

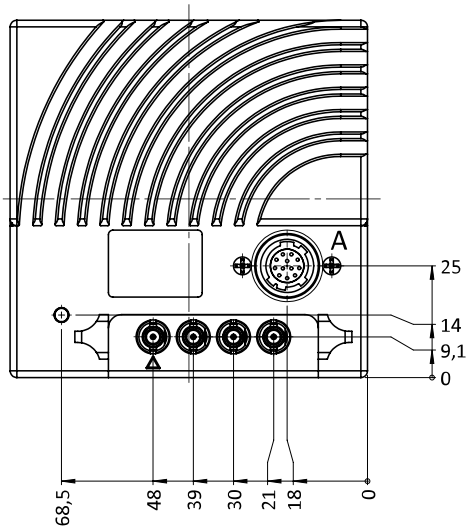

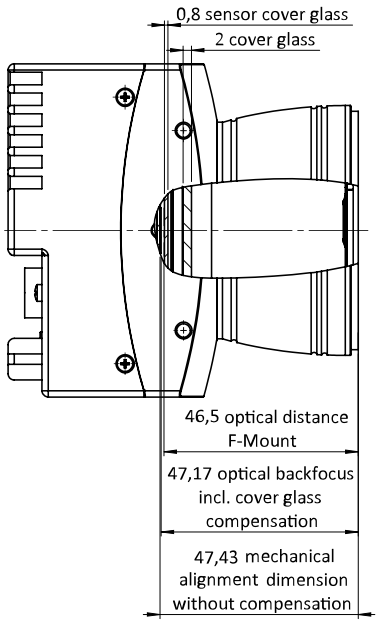

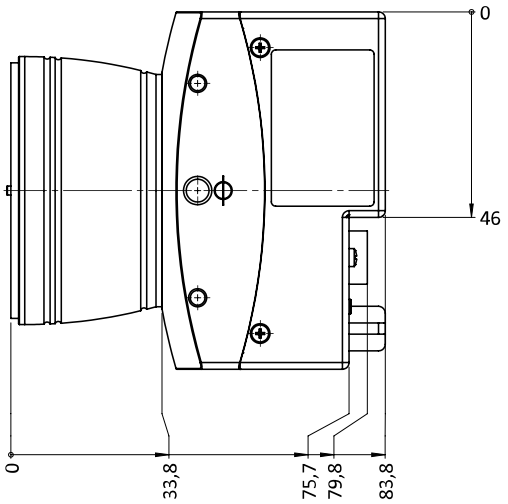

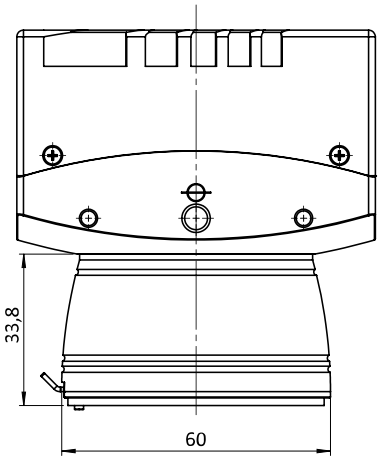

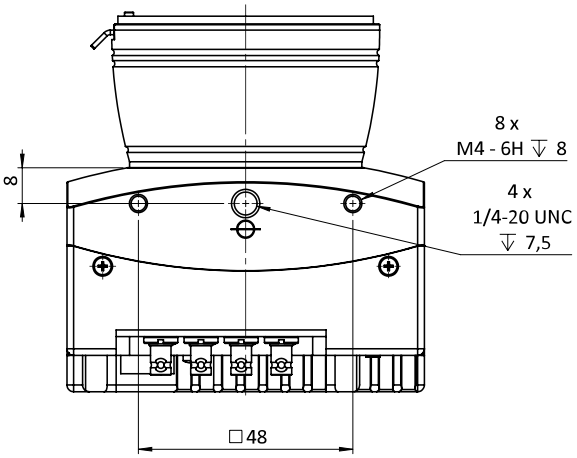

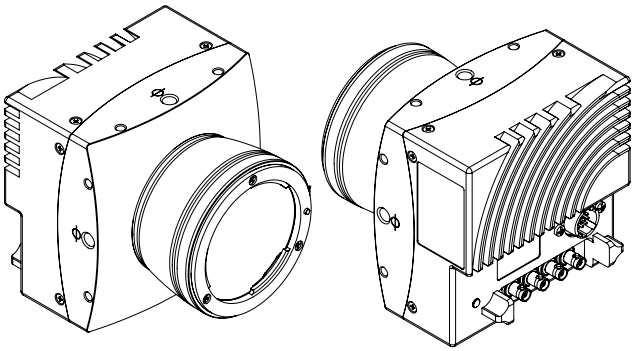

I/O pin assignment

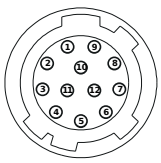

Pin	Signal	Pin	Signal
1 + 12	GND	6	IN0
2 + 11	VCC (12- 24V)	7	IO_{GND}
3	IO_{GND}	8	OUT1
4	OUT0	9	IO_{GND}
5	IO_{GND}	10	IN1