Allied Vision



EoSens CoaXPress-12

EoSens2.0CCX12-CM

□□	
□□	EoSens2.0CCX12-CM
□□ □□	F006009
□□ □□□	EoSens CoaXPress-12
□□	Available

□□	
□□ □□	Area scan
□□□	Color
□□□□	Visible
□□□□ □□	400 nm to 1000 nm
□□□	1,920 × 1,080 (2.00 MP)
□□ □□	Luxima Lux19HS
□□ □□□□ (□□)	cmos
□□ □□	Global shutter (GS)
□□ □□	19.2 × 10.8 mm (22.03 mm, Type 4/3)
□□ □□	10.00 µm × 10.00 µm

□□ □□	
□□ □□ □□	8-bit, 10-bit
RGB □□ □□	bayer8, bayer10

□□□ □ □□	
□□ □□□ □□	2247 fps
□□ □□□ □□ ROI □□	1920 x 1080 | 2247 fps, 1024 x 768 | 3152 fps, 640 x 480 | 5020 fps, 128 x 128 | 18177 fps, 1920 x 8 | 170578 fps, x | 170575 fps,
□□ □□	2 µs to 1 s
□□	0.0 dB to 18.0 dB

I/O □ □□

□□□ □□	0 x LVDS input, 0 x LVDS output, 0 x TTL input, 0 x TTL output, 2 x 24V input, 0 x Open drain output,
□□ □□□ □□	0 x RS232 input, 0 x RS232 output, 0 x RS422 input, 0 x RS422 output,
□□□ □□	0 x Optical isolated input, 0 x Optical isolated input,
I/O □□□	12-pin Hirose HR10A-10P-12S
□□ □□ □□	12 to 24VDC, Power over CoaXPress
□□ □□	External: 13 W (typical)

□□ □□

□□ □□	-10 °C to 65 °C (□□□)

□□□ □□

□□ □□ (L x W x H mm)	55 × 80 × 80
IP □□	IP30
□□ □□□	C-Mount
□□	500 g

□□□□□

□□□ □□□□□	cxp-12 with 4 connections
□□□□□ □□□	(micro-BNC)
□□ □□	CoaXPress 2.0

FW □□ - □□□ □□

□□ □□	external
□□ □□	digital, analog
□□□ □□ □□	roi, mirror-image

FW □□ - □□□ □□

□□□ □□/□□□	external, trigger-over-cxp

Technical Drawing

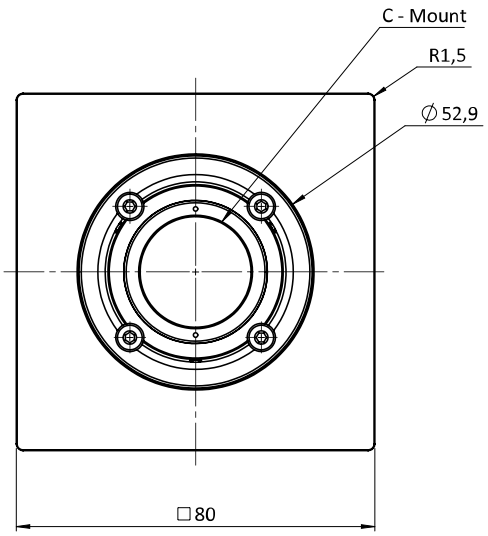

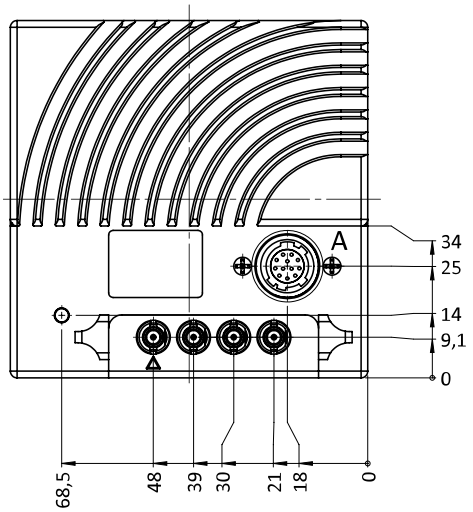

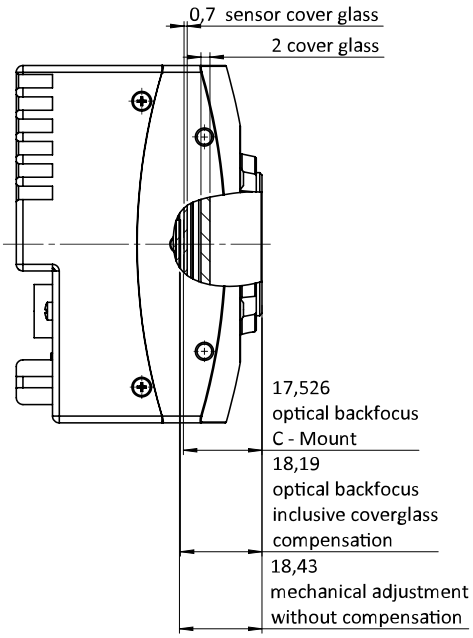

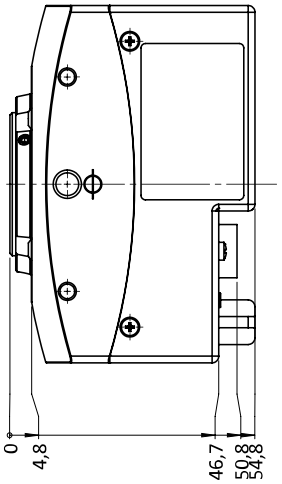

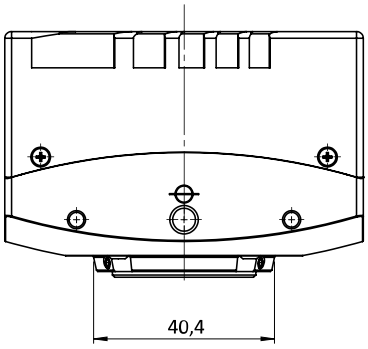

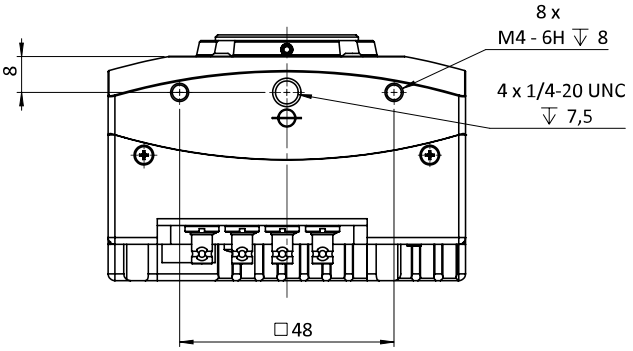

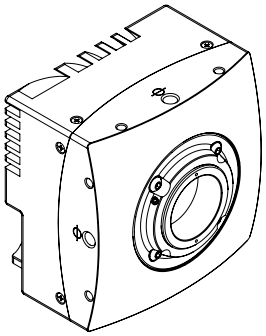

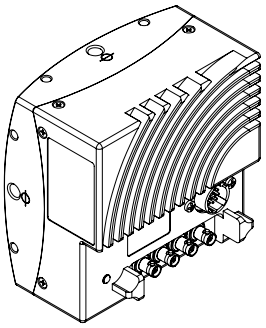

I/O pin assignment

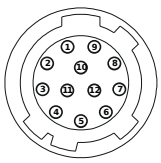

Pin	Signal	Pin	Signal
1 + 12	GND	6	IN0
2 + 11	VCC (12- 24V)	7	IO_{GND}
3	IO_{GND}	8	OUT1
4	OUT0	9	IO_{GND}
5	IO_{GND}	10	IN1