Allied Vision



SHR 10GigE

shr661CXGE

□□

□□□	shr661CXGE
□□□□□	F004144
□□□□□□	SHR 10GigE
□□□□□	Available

□□□□

□□□□□□□	Area scan
□□□	Color
□□□□□	Visible
□□□□□□□	400 nm to 1000 nm
□□□	13,392 × 9,528 (127.60 MP)
□□□□□□□	Sony IMX661
□□□□□□□□□□	cmos
□□□□□□□□	Global shutter (GS)
□□□□□□□	46.2 × 32.87 mm (56.7 mm, Type 3.6)
□□□□□□□	3.45 µm × 3.45 µm

□□□□□□□□□□

□□□□□□□□□	8-bit, 12-bit
RGB□□□□□□□□□□	bayer8, bayer12packed

□□□□□□□□

□□□□□□□□□	74.4 dB
SNR	41.5 dB

□□□□□□□□□□

□□□□□□□□□□	8.2 fps
□□□□	163 µs to 60 s
□□□	0.0 dB to 36.0 dB

I/O□□□

□□□□	0 x LVDS input, 0 x LVDS output, 0 x TTL input, 0 x TTL output, 2 x 24V input, 4 x Open drain output,
□□□□□□□□	1 x RS232 input, 1 x RS232 output, 0 x RS422 input, 0 x RS422 output,
□□□□	1 x Optical isolated input, 0 x Optical isolated input,
I/O□□□□	12-pin Hirose HR10A-10P-12S
□□	10 to 25VDC, Power over Ethernet (POE+, in option -P)
□□□□	External: 18 W (typical)

□□□□

□□□□	-10 °C to 60 °C (□□)

□□□□□

□□□□□L x W x H mm□	83 × 80 × 80
□□□□□/□□□□□	IR-Cut - 680nm
IP□□	IP30
□□□□□□□	M72x0.75
□□	580 g

□□□□□□□□□FPGA

□□□□□□□□□□□□□□□	32 MByte

□□□□□□□□

□□□□□□□□□□□□□	10gige
□□□□□□□□□□□□□	(RJ-45)
□□□□□□□	GigE Vision 2.0

FW□□ - □□□□

□□□□□	manual, auto, external
□□□□□□	auto, manual

FW□□ - □□□□

□□□□□□□□□□□□	auto, manual
□□□□□□□	lut, mirror-image, dpc, shading-correction, ffc

FW□□ - □□□□□

□□□□□□□□/□□	internal, software, external
□□□□□□□□	User Sets, POE, PWM(4), Sequencer,

Quantum Efficiency

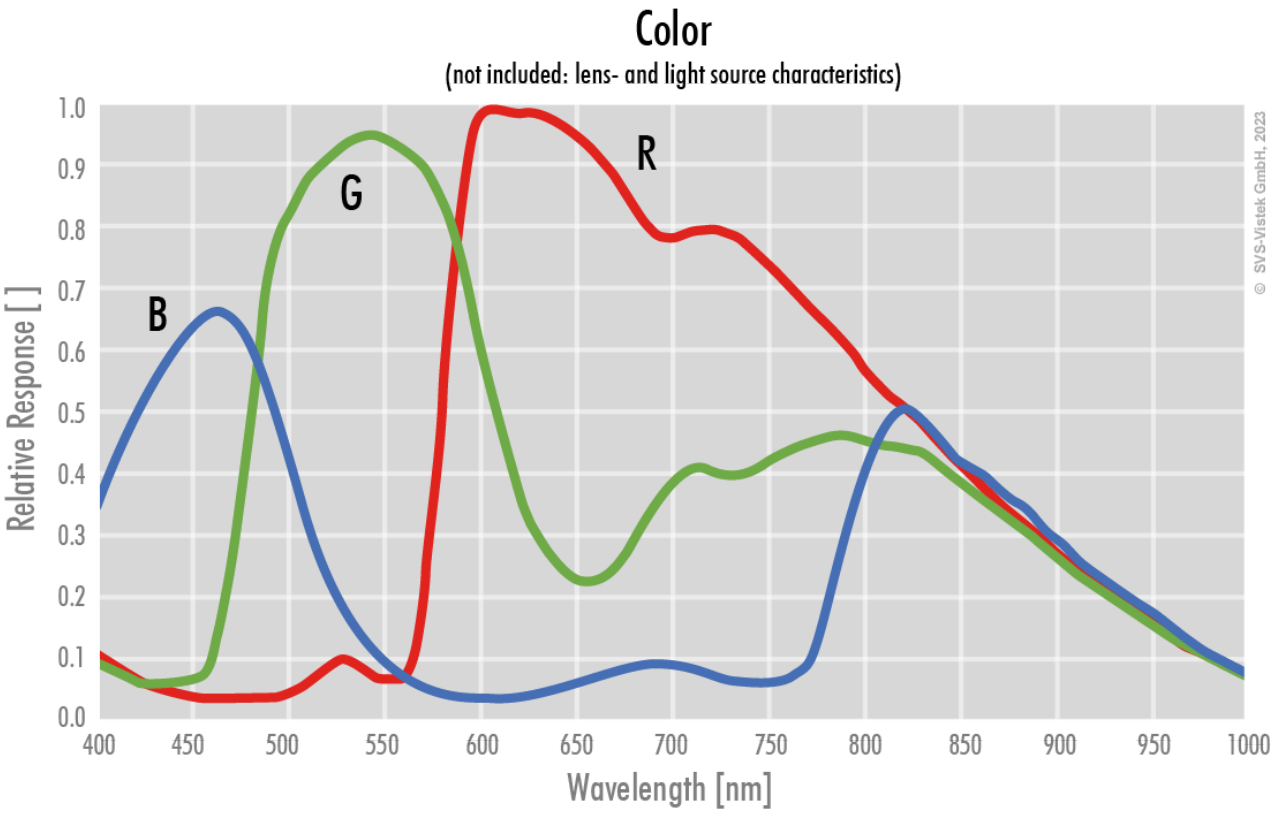

Allied Vision

Technical Drawing

front

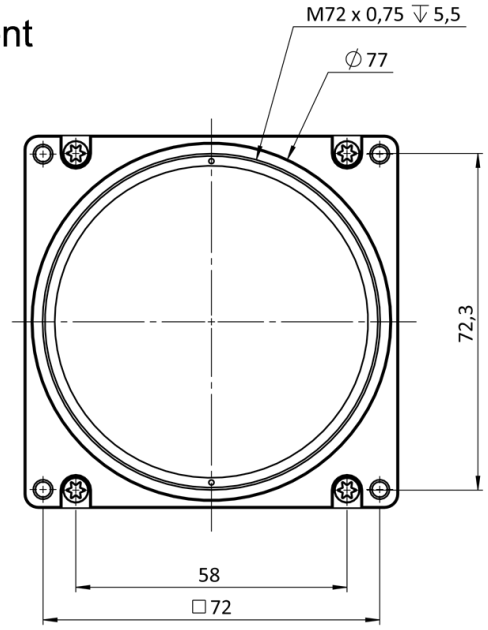

back

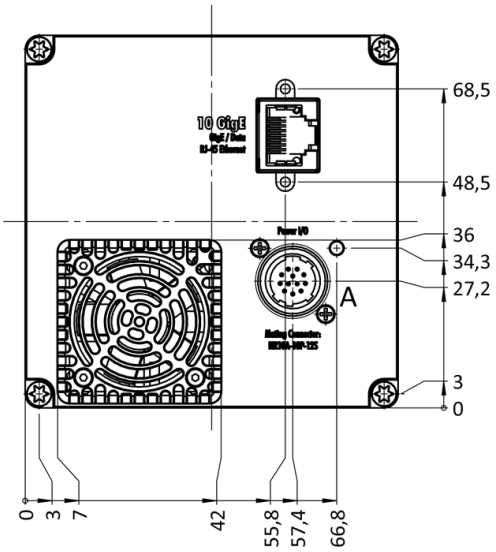

cross section

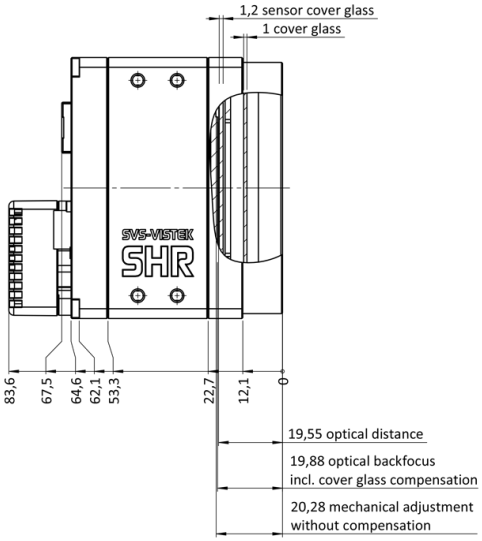

right side

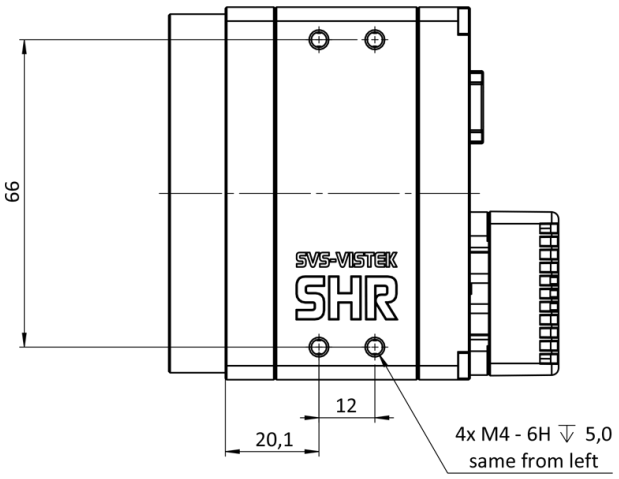

top

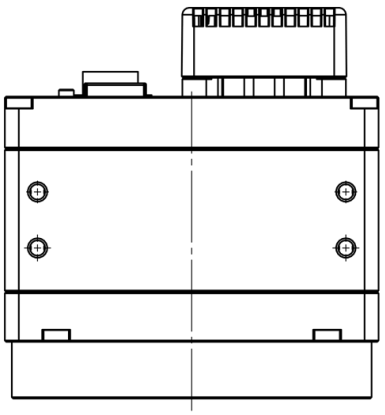

bottom

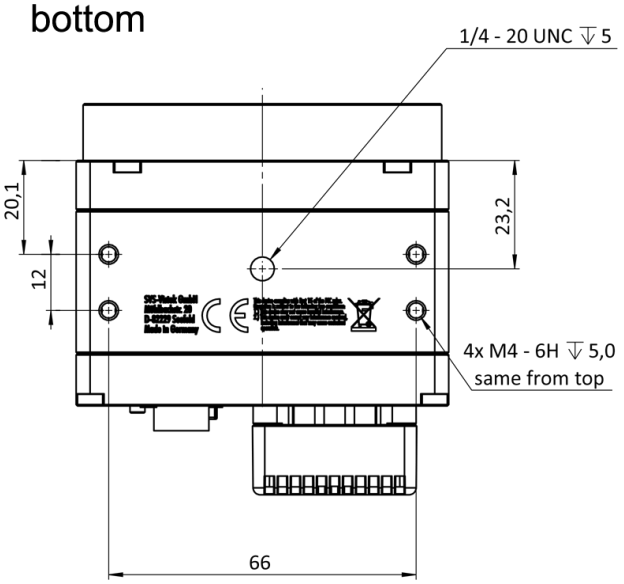

3D

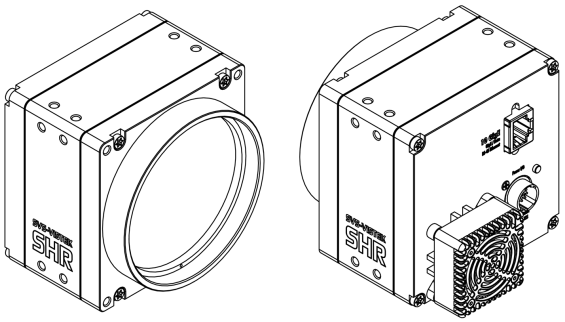

I/O pin assignment

Hirose 12 Pin

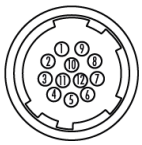

1	VIN –	(GND)	7	OUT 1	(open drain)
2	VIN +	(10 V to 25 V DC)	8	OUT 2	(open drain)
3	IN 4	(RXD RS232)	9	IN 3 +	(opto In +)
4	OUT 4	(TXD RS232)	10	IN 3 –	(opto In –)
5	IN 1	(0 - 24V)	11	OUT 3	(open drain)
6	IN 2	(0 - 24V)	12	OUT 0	(open drain)