Allied Vision



SHR 10GigE

shr461MXGE

□□

□□□	shr461MXGE
□□□□□	F004109
□□□□□□	SHR 10GigE
□□□□□	Discontinued

□□□□

□□□□□□□	Area scan
□□□	Mono
□□□□□	Visible
□□□□□□□	400 nm to 1000 nm
□□□	11,648 × 8,742 (101.80 MP)
□□□□□□□	Sony IMX461
□□□□□□□□□□	cmos
□□□□□□□□	Rolling shutter (RS)
□□□□□□□	43.8 × 32.87 mm (54.76 mm, Type 3.4)
□□□□□□□	3.76 µm × 3.76 µm

□□□□□□□□□□

□□□□□□□□□	8-bit, 12-bit, 16-bit
□□□□□□□□□□□□□□□	mono8, mono12, mono16

□□□□□□□□

□□□□□□□□□	81.3 dB
SNR	46.8 dB

□□□□□□□□□□

□□□□□□□□□□	8.7 fps
□□□□	60 µs to 60 s
□□□	0.0 dB to 36.0 dB

I/O□□□

□□□□	0 x LVDS input, 0 x LVDS output, 0 x TTL input, 0 x TTL output, 2 x 24V input, 4 x Open drain output,
□□□□□□□□	1 x RS232 input, 1 x RS232 output, 0 x RS422 input, 0 x RS422 output,
□□□□	1 x Optical isolated input, 0 x Optical isolated input,
I/O□□□□	12-pin Hirose HR10A-10P-12S
□□	10 to 25VDC, Power over Ethernet (POE+, in option -P)
□□□□	External: 17 W (typical)

□□□□

□□□□	-10 °C to 45 °C (□□□□□□□□□□)

□□□□□

□□□□□L x W x H mm□	83 × 80 × 80
□□□□□/□□□□□	Borofloat B270i - AR coating
IP□□	IP30
□□□□□□□	M72x0.75
□□	580 g

□□□□□□□□

□□□□□□□□□□□□□	10gige
□□□□□□□□□□□□□	(RJ-45)
□□□□□□□	GigE Vision 2.0

FW□□ - □□□□

□□□□□	manual, auto, external
□□□□□□	auto, manual
□□□□□□	lut, mirror-image, dpc, shading-correction, ffc

FW□□ - □□□□□

□□□□□□□/□□	internal, software, external
□□□□□□□	User Sets, POE, PWM(4), Sequencer,

Quantum Efficiency

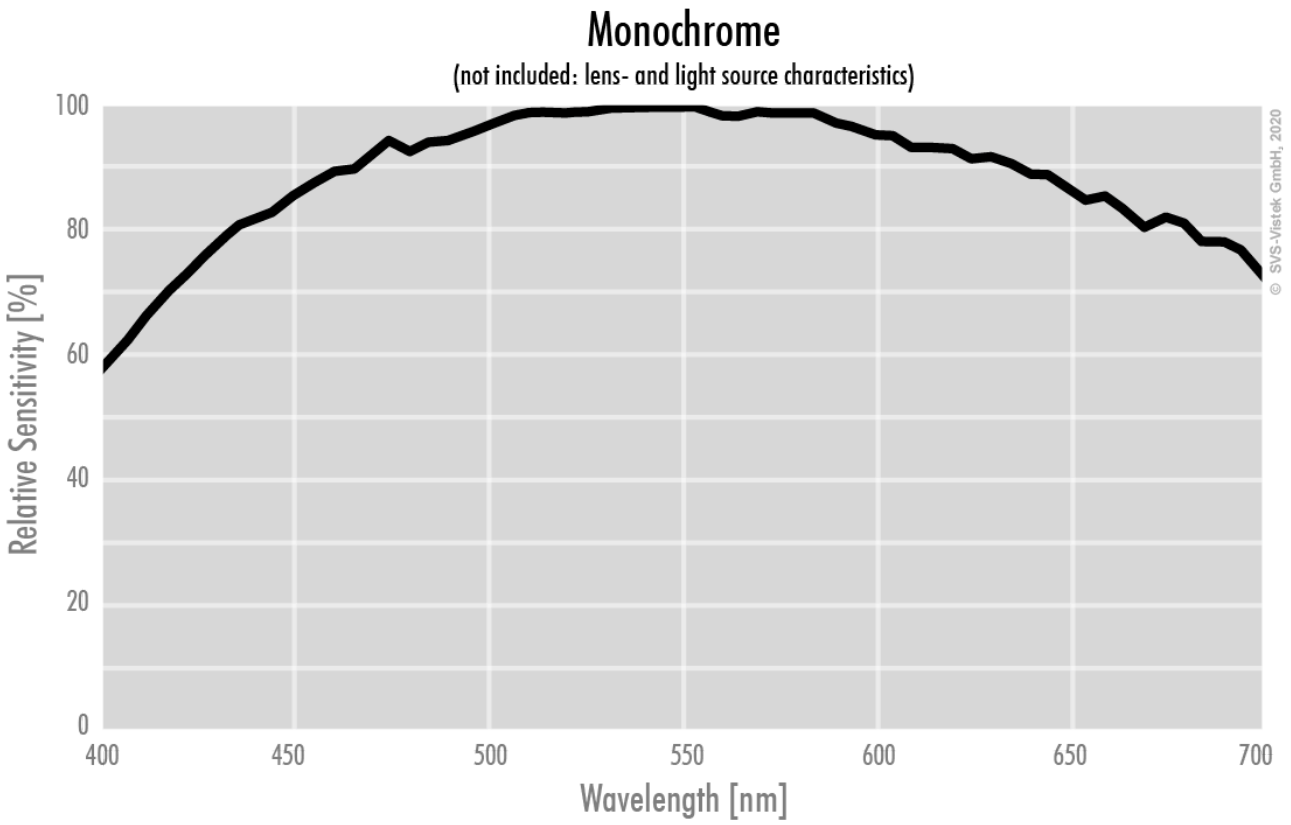

Allied Vision

Technical Drawing

front

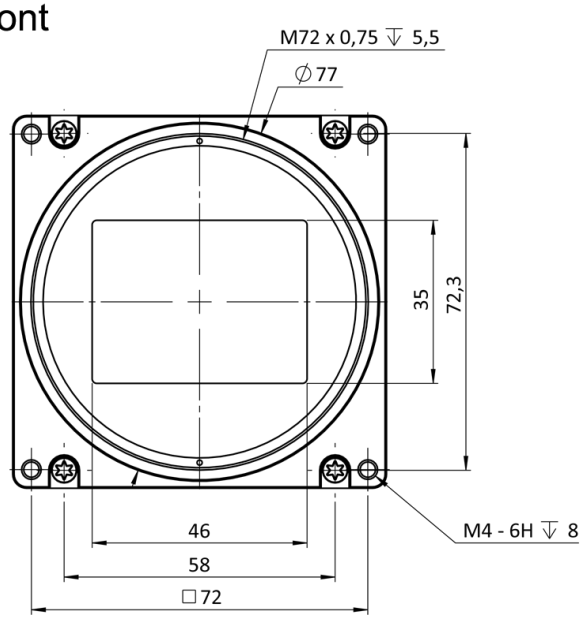

back

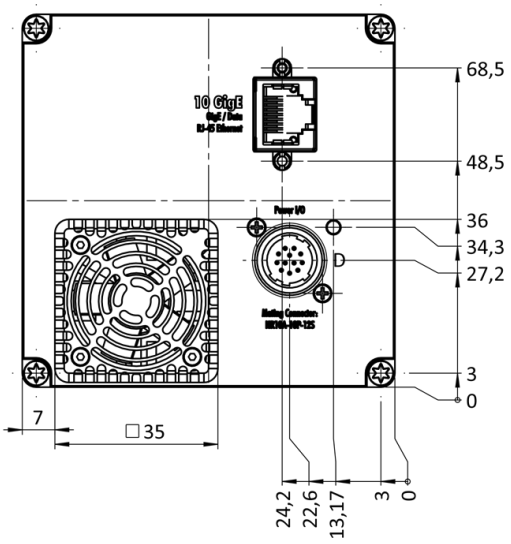

cross section

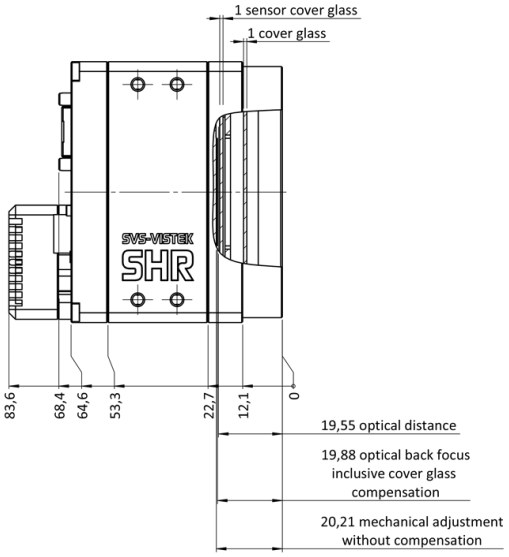

right side

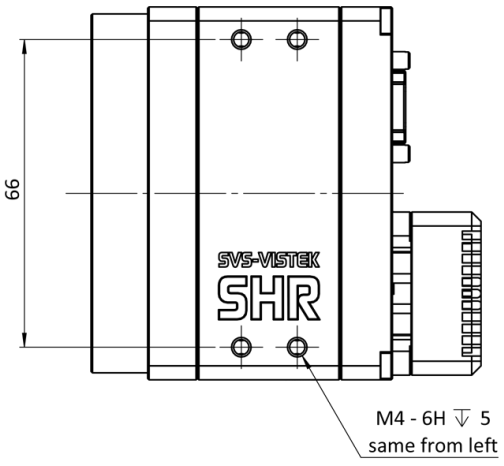

top

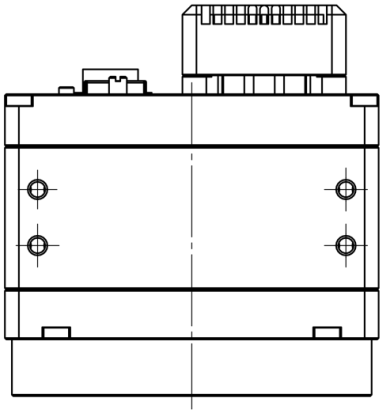

bottom

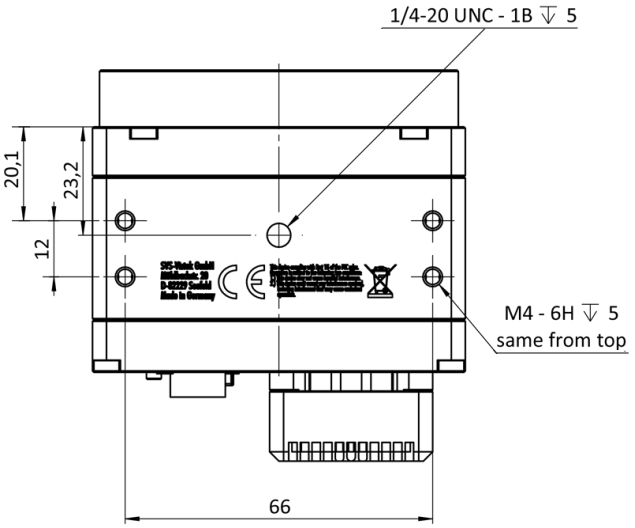

3D

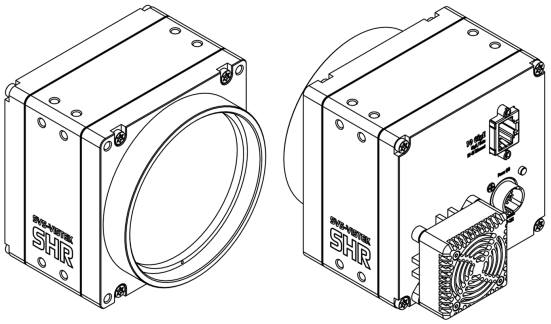

I/O pin assignment

Hirose 12 Pin

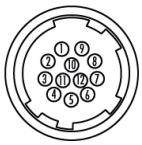

1	VIN –	(GND)	7	OUT 1	(open drain)
2	VIN +	(10 V to 25 V DC)	8	OUT 2	(open drain)
3	IN 4	(RXD RS232)	9	IN 3 +	(opto In +)
4	OUT 4	(TXD RS232)	10	IN 3 –	(opto In –)
5	IN 1	(0 - 24V)	11	OUT 3	(open drain)
6	IN 2	(0 - 24V)	12	OUT 0	(open drain)