Allied Vision



HR CoaXPress

hr342MCX

□□	
□□□	hr342MCX
□□□□□	F004072
□□□□□□□	HR CoaXPress
□□□□□	Available

□□□□	
□□□□□□□□	Area scan
□□□	Mono
□□□□□	Visible
□□□□□□□□	400 nm to 1000 nm
□□□	6,464 × 4,852 (31.40 MP)
□□□□□□□□	Sony IMX342
□□□□□□□□□□□	cmos
□□□□□□□□□	Global shutter (GS)
□□□□□□□□	22.3 × 16.74 mm (27.88 mm, Type APS-C)
□□□□□□□□	3.45 µm × 3.45 µm

□□□□□□□□□□	
□□□□□□□□□□	8-bit, 12-bit
□□□□□□□□□□□□□□□□	mono8, mono12

□□□□□□□□	
□□□□□□□□□□	70.5 dB
SNR	39.9 dB

□□□□□□□□□□

□□□□□□□□□□	35.7 fps
□□□□	19 µs to 60 s
□□□	0.0 dB to 48.0 dB

I/O□□□

□□□□	0 x LVDS input, 0 x LVDS output, 0 x TTL input, 0 x TTL output, 2 x 24V input, 4 x Open drain output,
□□□□□□□□	1 x RS232 input, 1 x RS232 output, 0 x RS422 input, 0 x RS422 output,
□□□□	1 x Optical isolated input, 0 x Optical isolated input,
I/O□□□□	12-pin Hirose HR10A-10P-12S
□□	10 to 25VDC, Power over CoaXPress
□□□□	External: 12 W (typical)

□□□□

□□□□	-10 °C to 65 °C (□□)

□□□□□

□□□□□L x W x H mm□	78 × 70 × 70
□□□□□/□□□□□	N-BK7 - AR coating
IP□□	IP30
□□□□□□□□	M58x0.75
□□	400 g

□□□□□□□□□FPGA

□□□□□□□□□□□□□□□□	160 MByte

□□□□□□□□

□□□□□□□□□□□□□□	cxp-6 with 4 connections
□□□□□□□□□□□□□□	(Din1.0/2.3)
□□□□□□□	CoaXPress 1.0

FW□□ - □□□□

□□□□□	manual, auto
□□□□□□	auto, manual

FW□□ - □□□□

□□□□□□□	roi, lut, mirror-image, dpc, shading-correction, ffc

FW□□ - □□□□□

□□□□□□□□/□□	internal, software, external
□□□□□□□□	PoCxP, User Sets, PWM(4), Sequencer,

Quantum Efficiency

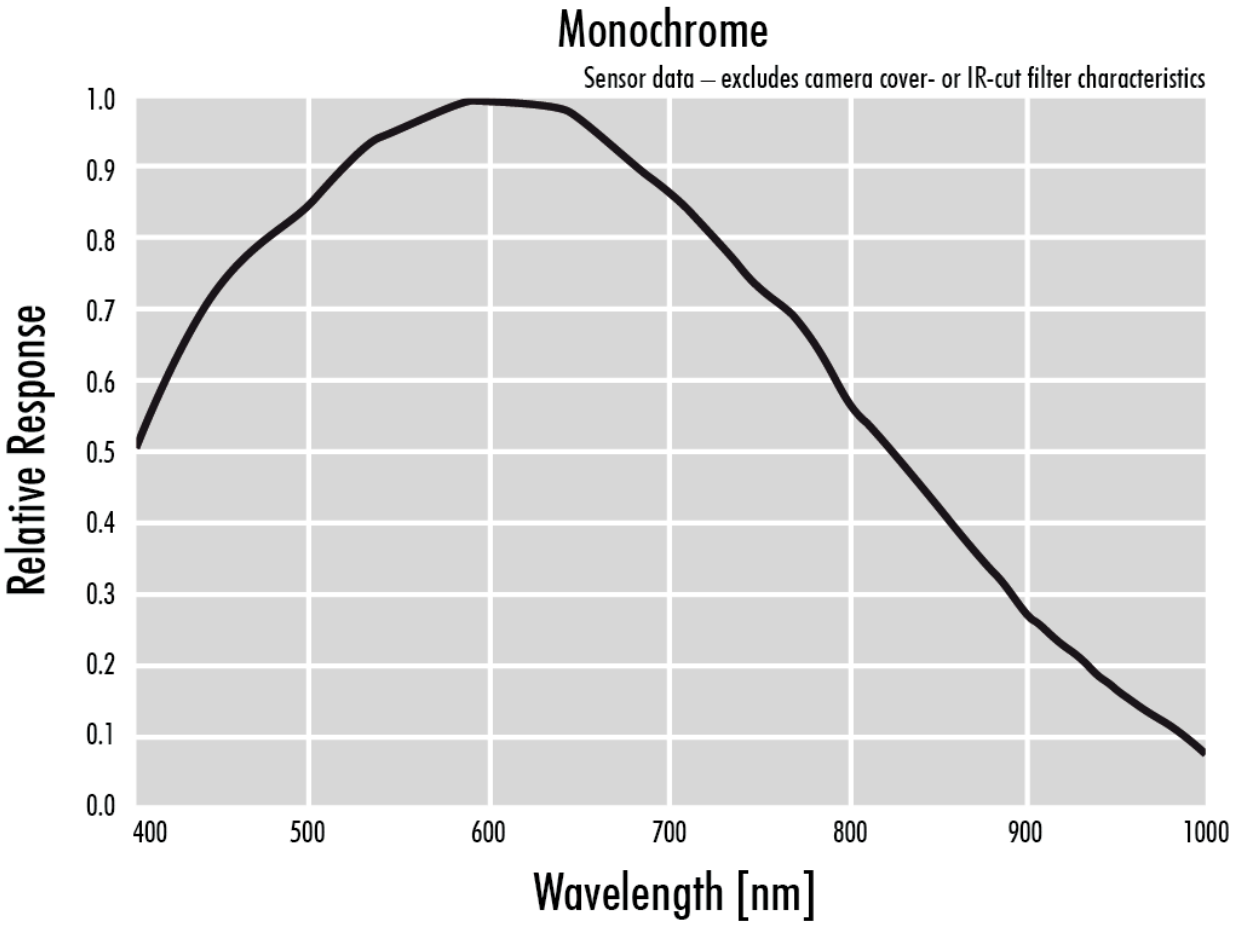

Allied Vision

Technical Drawing

front view

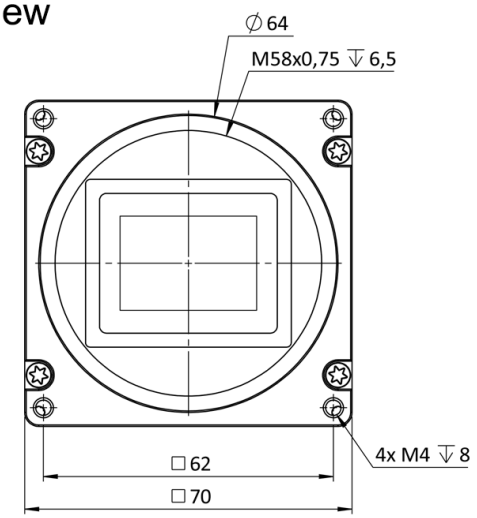

back view

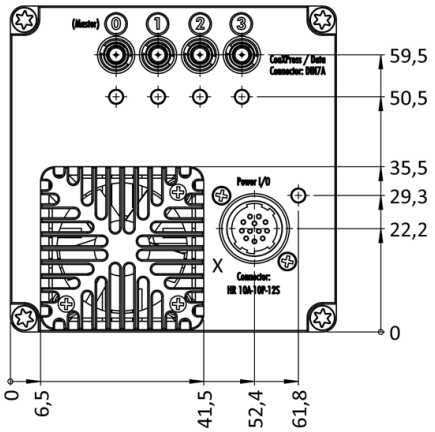

cross section

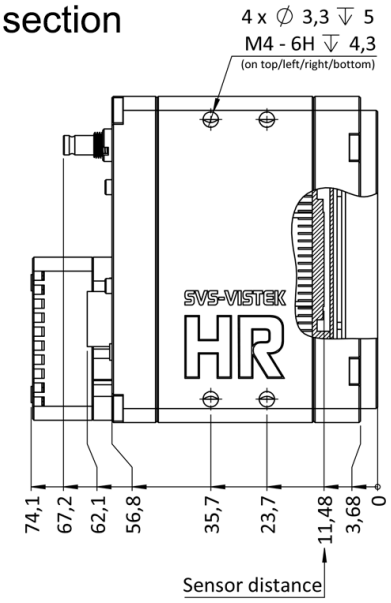

right view

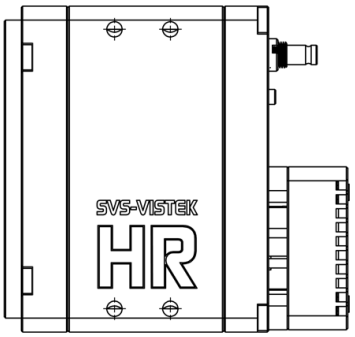

top view

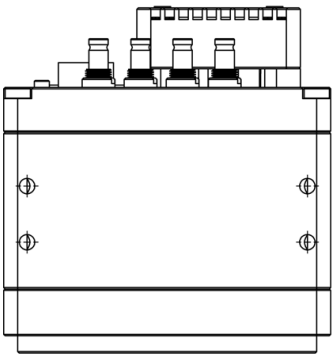

bottom view

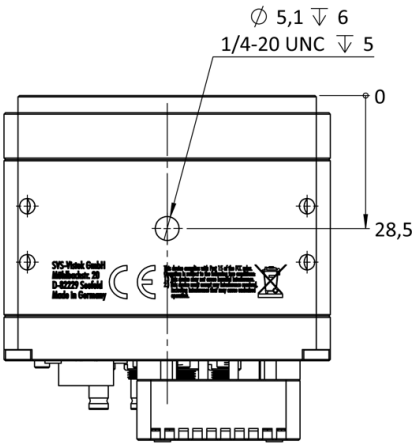

3D view

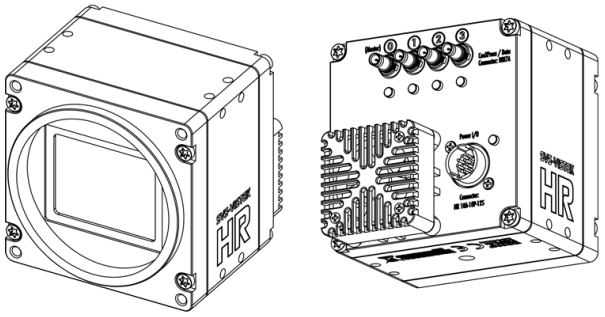

I/O pin assignment

Hirose 12 Pin

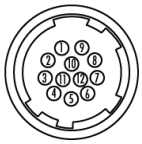

1	VIN –	(GND)	7	OUT 1	(open drain)
2	VIN +	(10 V to 25 V DC)	8	OUT 2	(open drain)
3	IN 4	(RXD RS232)	9	IN 3 +	(opto In +)
4	OUT 4	(TXD RS232)	10	IN 3 –	(opto In –)
5	IN 1	(0 - 24V)	11	OUT 3	(open drain)
6	IN 2	(0 - 24V)	12	OUT 0	(open drain)