Allied Vision

HR 100GigE

hr928M100GE



Preliminary product information. Features and technical specifications are subject to change without notice.

□□	
□□□	hr928M100GE
□□□□□	F004276
□□□□□□	HR 100GigE
□□□□□	Coming soon

□□□□	
□□□□□□□	Area scan
□□□	Mono
□□□□□	Visible
□□□□□□□	400 nm to 1000 nm
□□□	8,256 × 8,256 (68.20 MP)
□□□□□□□	Sony IMX928
□□□□□□□□□□	cmos
□□□□□□□□□	Global shutter (GS)
□□□□□□□	22.62 × 22.62 mm (31.99 mm, Type 2)
□□□□□□□	2.74 µm × 2.74 µm

□□□□□□□□□□	
□□□□□□□□□	10-bit, 12-bit, 8-bit
□□□□□□□□□□□□□□□	mono10, mono12, mono8

□□□□□□□□□	
□□□□□□□□□	138 fps
□□□□	8 µs to 60 s
□□□	0.0 dB to 48.0 dB

preliminary

I/O□□□

□□□□	0 x LVDS input, 0 x LVDS output, 0 x TTL input, 0 x TTL output, 2 x 24V input, 2 x Open drain output,
□□□□□□□□	0 x RS232 input, 0 x RS232 output, 1 x RS422 input, 1 x RS422 output,
□□□□	0 x Optical isolated input, 0 x Optical isolated input,
I/O□□□□	12-pin Hirose HR10A-10P-12S
□□	24 to 25VDC
□□□□	External: 30 W (typical)

□□□□

□□□□□□□□□	-10 °C to 60 °C

□□□□□

□□□□□L x W x H mm□	93 × 62 × 62
□□□□□/□□□□□	K9 - AR coating - 400-850nm
IP□□	IP30
□□□□□□□□	M58x0.75
□□	550 g

□□□□□□□□□FPGA

□□□□□□□RAM□	4032 MByte
□□□□□□□□□□□□□□□□	32768 MByte

□□□□□□□□

□□□□□□□□□□□□□	100gige
□□□□□□□□□□□□□	(QSFP28)
□□□□□□□	GigE Vision 3.0

FW□□ - □□□□

□□□□□□	auto, external, manual
□□□□□□□	auto, manual
□□□□□□□	dpc, ffc, lut, mirror-image, roi, shading-correction

preliminary

Allied Vision

Quantum Efficiency

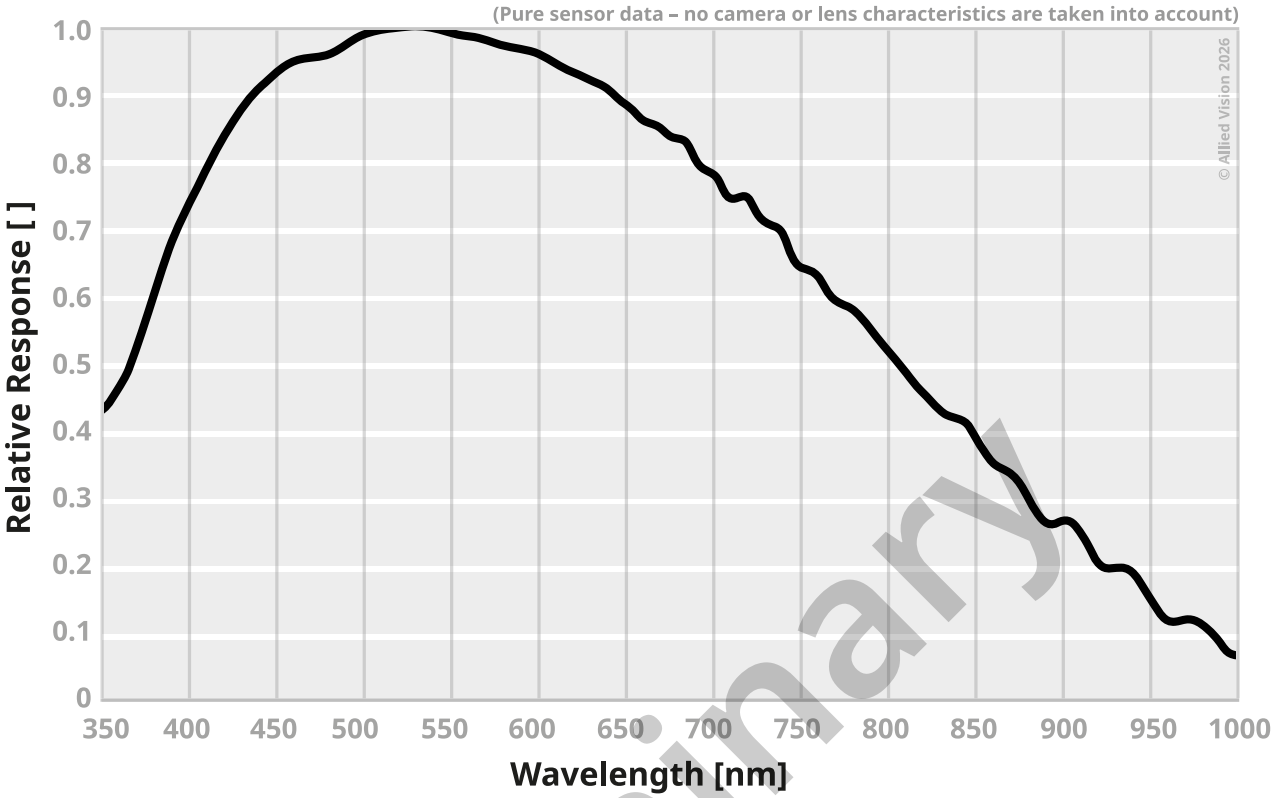

preliminary

Technical Drawing

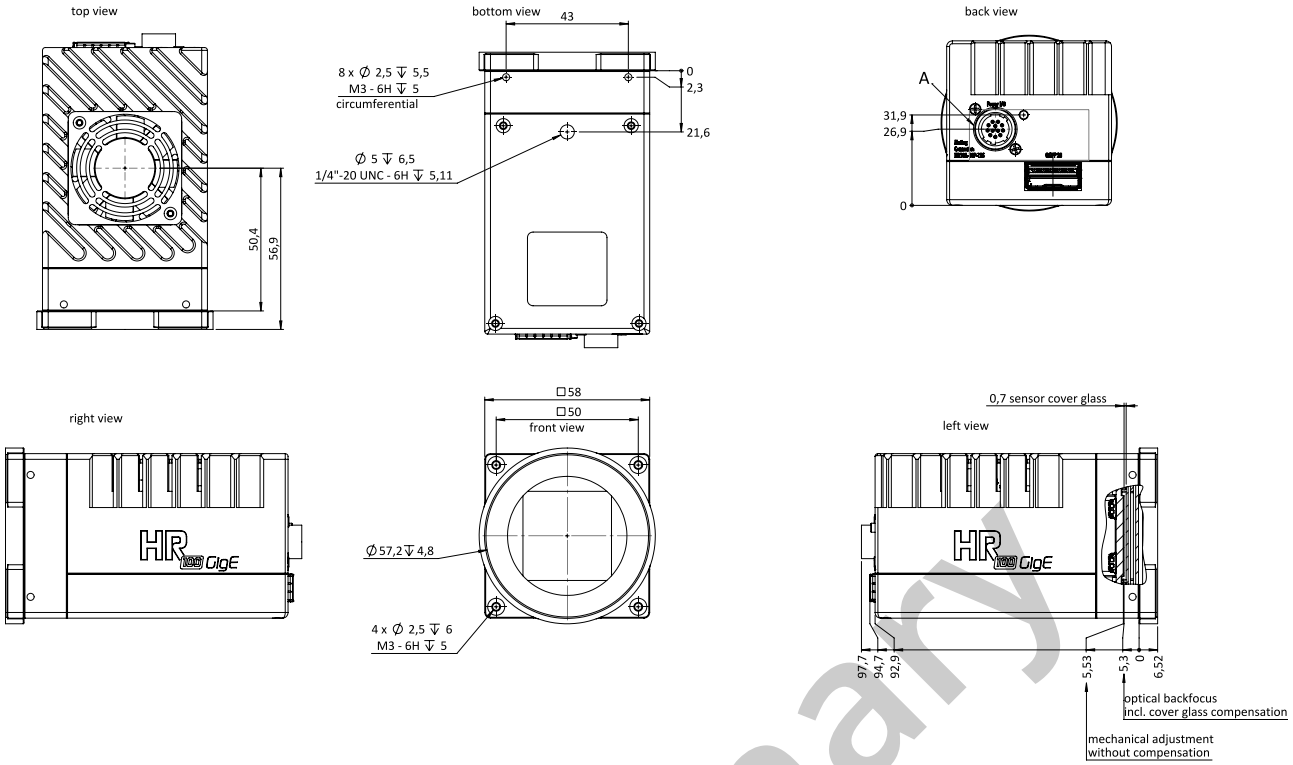

I/O pin assignment

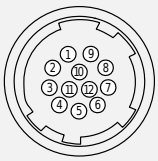

1	VIn- (GND)
2	VIn+ (24 V DC)
3	In 4 (RxD RS232)
4	Out 4 (TxD RS232)
5	In 1 (0 ... 24 V)
6	In 2 (0 ... 24 V)
7	Out 1 (open drain)
8	Out 2 (open drain)
9	In 3+(opto In+)
10	In 3-(opto In-)
11	Out 3 (open drain)
12	Out 0 (open drain)

preliminary