FXO CoaXPress

fxo532MCX12-2C



□□

□□□	fxo532MCX12-2C
□□□□□	F002250
□□□□□□	FXO CoaXPress
□□□□□	Available

□□□□

□□□□□□□	Area scan
□□□	Mono
□□□□□	Visible
□□□□□□□	400 nm to 1000 nm
□□□	5,328 × 3,040 (16.20 MP)
□□□□□□□	Sony IMX532
□□□□□□□□□□	cmos
□□□□□□□□	Global shutter (GS)
□□□□□□□	14.6 × 8.33 mm (16.81 mm, Type 1.1)
□□□□□□□	2.74 µm × 2.74 µm

□□□□□□□□□□

□□□□□□□□□	12-bit, 8-bit
□□□□□□□□□□□□□□□	mono12, mono8

□□□□□□□□

□□□□□□□□□	72 dB
SNR	39 dB

Allied Vision

□□□□□□□□□□

□□□□□□□□□□	144 fps
□□□□	21 µs to 60 s
□□□	0.0 dB to 48.0 dB

I/O□□□

□□□□	0 x LVDS input, 0 x LVDS output, 0 x TTL input, 0 x TTL output, 2 x 24V input, 4 x Open drain output,
□□□□□□□□	1 x RS232 input, 1 x RS232 output, 0 x RS422 input, 0 x RS422 output,
□□□□	1 x Optical isolated input, 0 x Optical isolated input,
I/O□□□□	12-pin Hirose HR10A-10P-12S
□□	10 to 25VDC, Power over CoaXPress
□□□□	External: 14 W (typical)

□□□□

□□□□	-10 °C to 60 °C (□□)
Humidity	10 % to 90 % (non-condensing)

□□□□□

□□□□□L x W x H mm□	73 × 50 × 50
□□□□□/□□□□□	K9 - AR coating - 400-850nm
IP□□	IP30
□□□□□□□	C-Mount
□□	240 g

□□□□□□□□□FPGA

□□□□□□□□□□□□□□□	32 MByte

□□□□□□□□

□□□□□□□□□□□□□	cxp-12 with 2 connections
□□□□□□□□□□□□□	(micro-BNC)
□□□□□□□	CoaXPress 2.0

FW□□ - □□□□

□□□□□	auto, external, manual

FW□□ - □□□□

□□□□□□□	auto, manual
□□□□□□□	dpc, ffc, lut, mirror-image, roi, shading-correction

FW□□ - □□□□□

□□□□□□□□/□□	external, internal, software

Quantum Efficiency

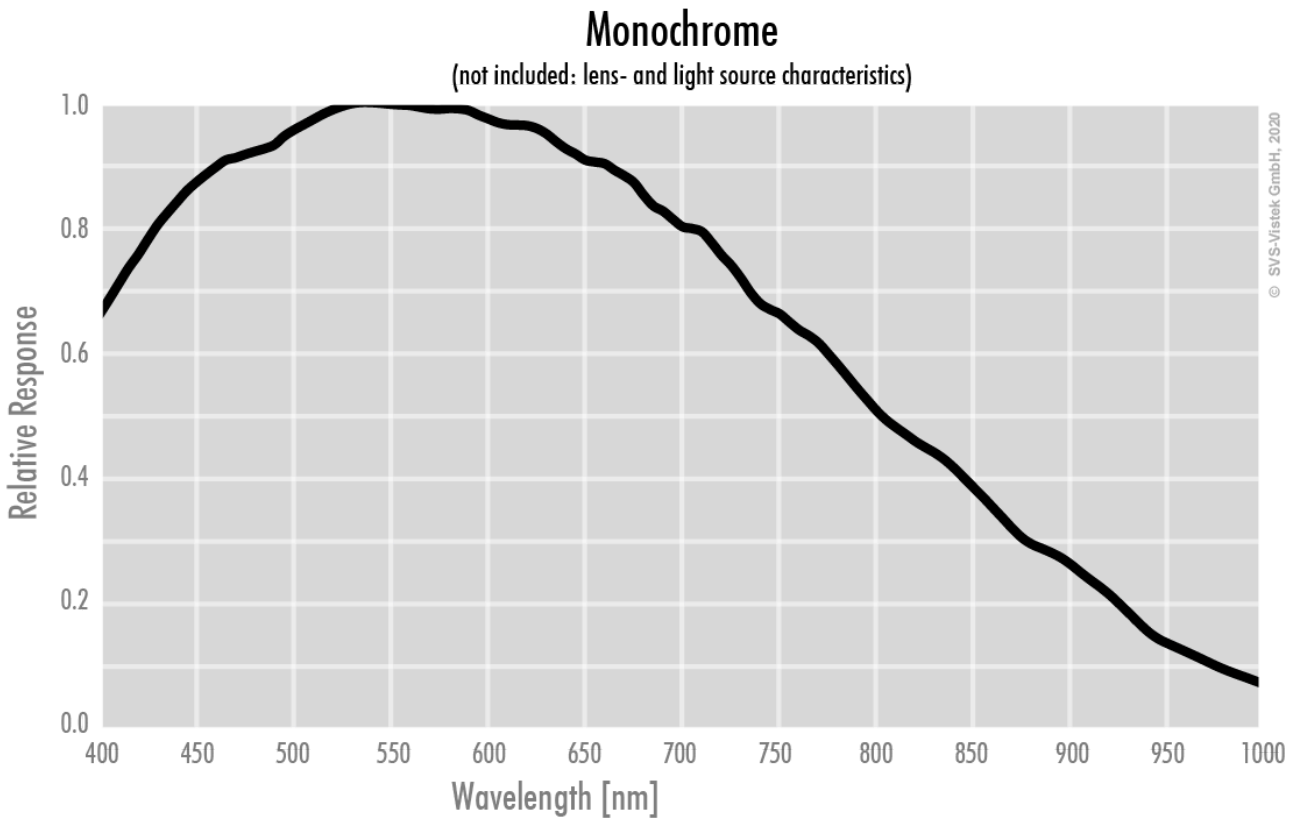

Technical Drawing

back view

front view

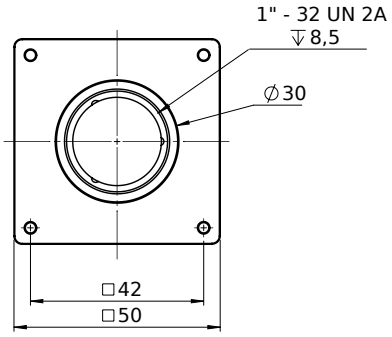

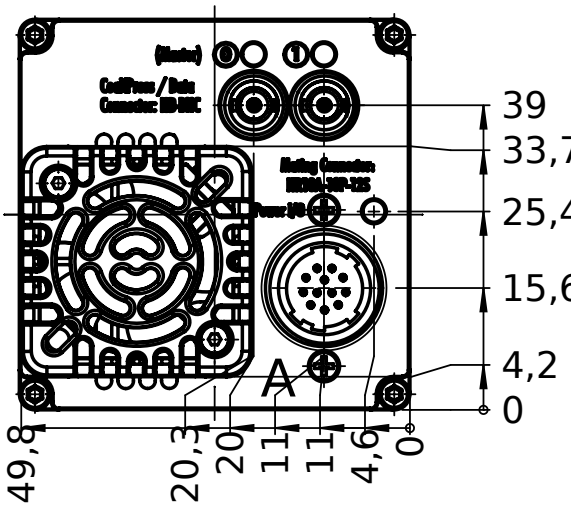

left view

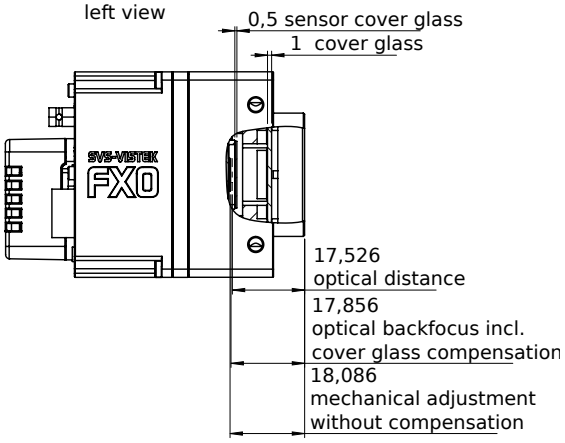

right view

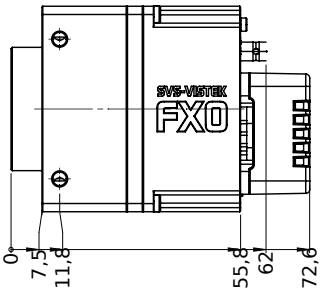

top view

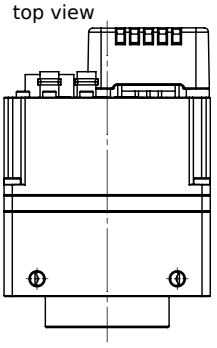

bottom view

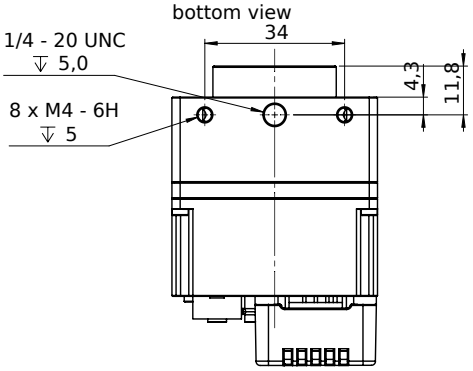

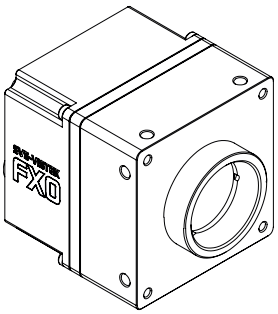

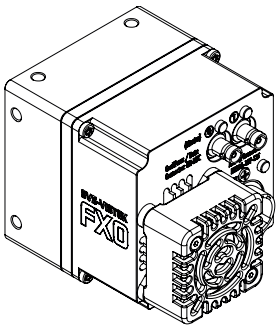

I/O pin assignment

Hirose 12 Pin

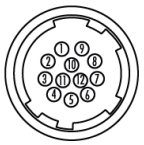

1	VIN –	(GND)	7	OUT 1	(open drain)
2	VIN +	(10 V to 25 V DC)	8	OUT 2	(open drain)
3	IN 4	(RXD RS232)	9	IN 3 +	(opto In +)
4	OUT 4	(TXD RS232)	10	IN 3 –	(opto In –)
5	IN 1	(0 - 24V)	11	OUT 3	(open drain)
6	IN 2	(0 - 24V)	12	OUT 0	(open drain)