# FXO CoaXPress

fxo535CCX12-2C



## □□

| | |
|---|---|
| □□□ | fxo535CCX12-2C |
| □□□□□ | F002256 |
| □□□□□□ | FXO CoaXPress |
| □□□□□ | Available |

## □□□□

| | |
|---|---|
| □□□□□□□ | Area scan |
| □□□ | Color |
| □□□□□ | Visible |
| □□□□□□□ | 400 nm to 1000 nm |
| □□□ | 4,096 × 3,008 (12.30 MP) |
| □□□□□□□ | Sony IMX535 |
| □□□□□□□□□□ | cmos |
| □□□□□□□□ | Global shutter (GS) |
| □□□□□□□ | 11.22 × 8.24 mm (13.92 mm, Type 1/1.1) |
| □□□□□□□ | 2.74 µm × 2.74 µm |

## □□□□□□□□□□

| | |
|---|---|
| □□□□□□□□□ | 8-bit, 12-bit |
| RGB□□□□□□□□□□ | bayer8, bayer12 |

## □□□□□□□□

| | |
|---|---|
| □□□□□□□□□ | 72 dB |
| SNR | 39 dB |

## □□□□□□□□□□

| | |
|---|---|
| □□□□□□□□□□ | 182.5 fps |
| □□□□ | 5 µs to 60 s |
| □□□ | 0.0 dB to 48.0 dB |

## I/O□□□

| | |
|---|---|
| □□□□ | 0 x LVDS input, 0 x LVDS output, 0 x TTL input, 0 x TTL output, 2 x 24V input, 4 x Open drain output, |
| □□□□□□□□ | 1 x RS232 input, 1 x RS232 output, 0 x RS422 input, 0 x RS422 output, |
| □□□□ | 1 x Optical isolated input, 0 x Optical isolated input, |
| I/O□□□□ | 12-pin Hirose HR10A-10P-12S |
| □□ | 10 to 25VDC, Power over CoaXPress |
| □□□□ | External: 13 W (typical) |

## □□□□

| | |
|---|---|
| □□□□ | -10 °C to 60 °C (□□) |

## □□□□□

| | |
|---|---|
| □□□□□L x W x H mm□ | 73 × 50 × 50 |
| □□□□□/□□□□□ | IR-Cut - 680nm |
| IP□□ | IP30 |
| □□□□□□□ | C-Mount |
| □□ | 240 g |

## □□□□□□□□□FPGA

| | |
|---|---|
| □□□□□□□□□□□□□□□ | 32 MByte |

## □□□□□□□□

| | |
|---|---|
| □□□□□□□□□□□□□ | cxp-12 with 2 connections |
| □□□□□□□□□□□□□ | (micro-BNC) |
| □□□□□□□ | CoaXPress 2.0 |

## FW□□ - □□□□

| | |
|---|---|
| □□□□□ | manual, auto, external |
| □□□□□□ | auto, manual |

## FW□□ - □□□□

| | |
|---|---|
| □□□□□□□□□□□□ | auto, manual |
| □□□□□□□ | roi, lut, mirror-image |

## FW□□ - □□□□□

| | |
|---|---|
| □□□□□□□□/□□ | internal, software, external |
| □□□□□□□□ | PoCxP, User Sets, PWM(4), Sequencer, |

## Quantum Efficiency

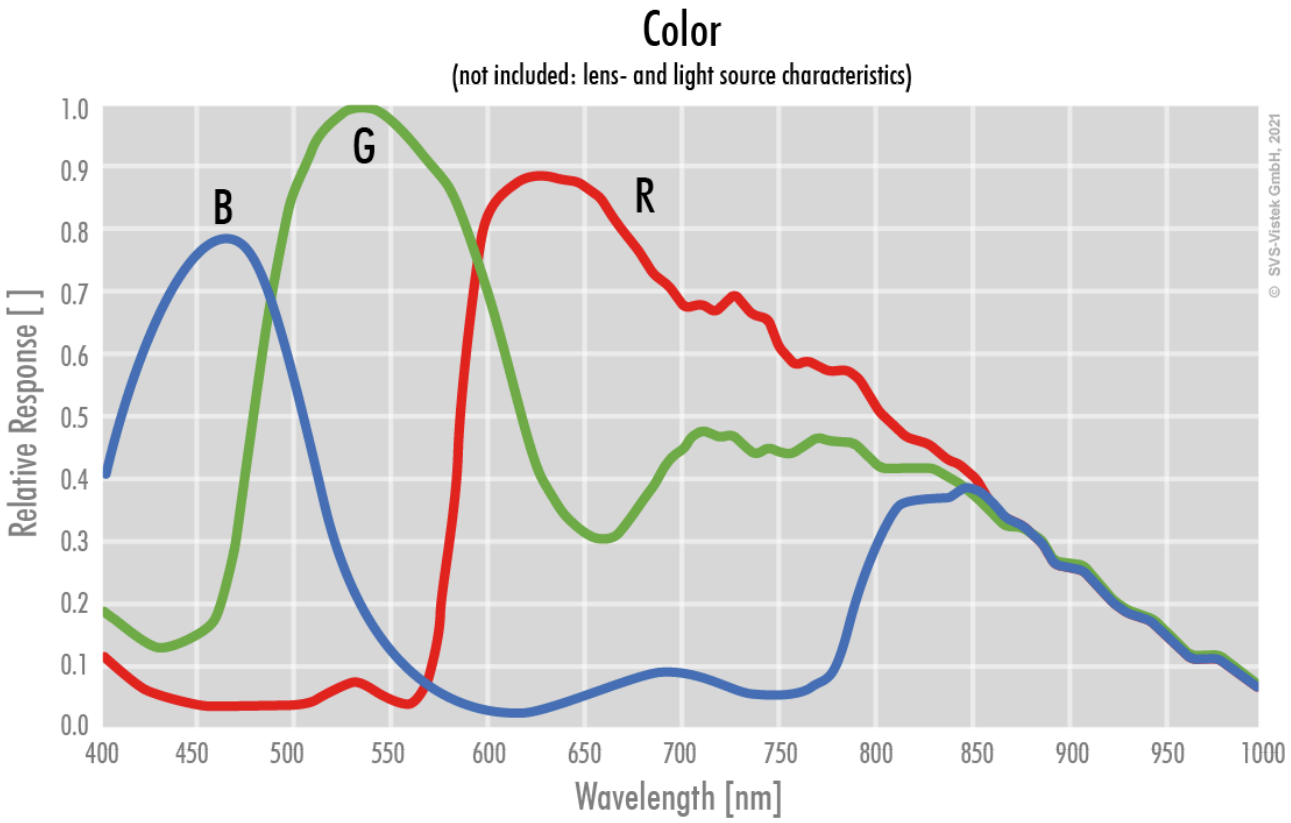

# Technical Drawing

back view

front view

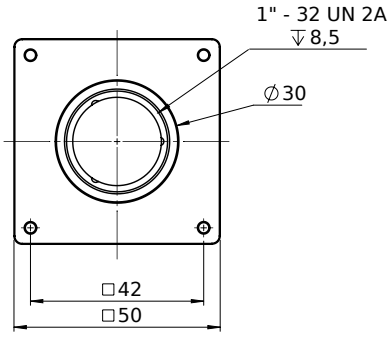


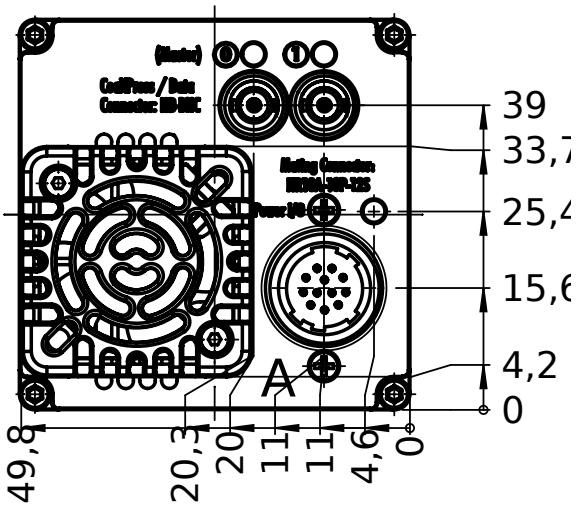


left view

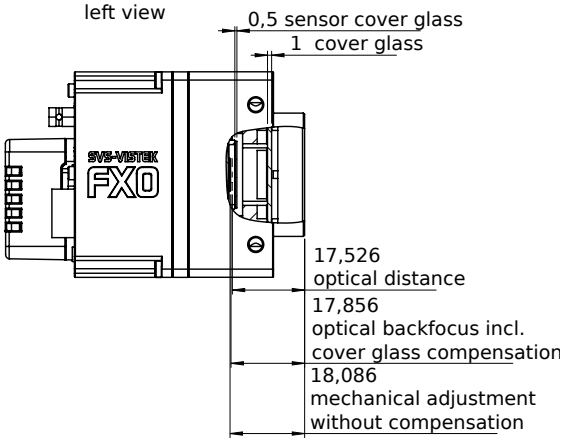


right view

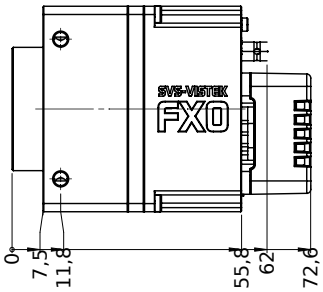


top view

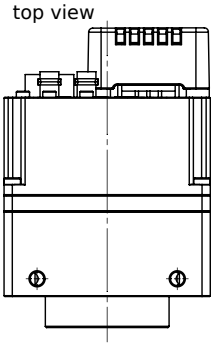

bottom view

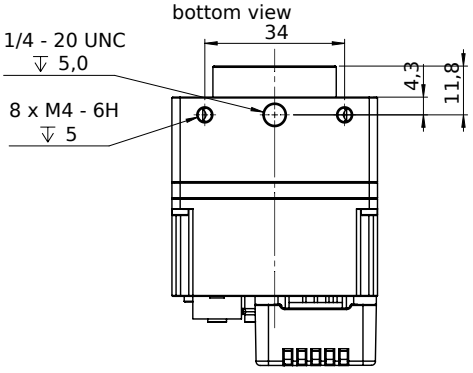

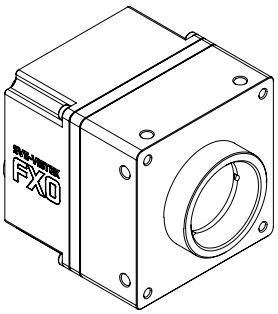

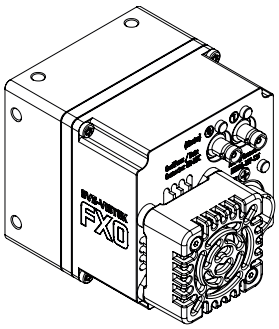

## I/O pin assignment

Hirose 12 Pin

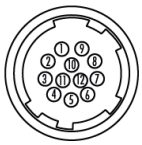

| | | | | | |
|---|---|---|---|---|---|
| 1 | VIN – | (GND) | 7 | OUT 1 | (open drain) |
| 2 | VIN + | (10 V to 25 V DC) | 8 | OUT 2 | (open drain) |
| 3 | IN 4 | (RXD RS232) | 9 | IN 3 + | (opto In + ) |
| 4 | OUT 4 | (TXD RS232) | 10 | IN 3 – | (opto In –) |
| 5 | IN 1 | (0 - 24V) | 11 | OUT 3 | (open drain) |
| 6 | IN 2 | (0 - 24V) | 12 | OUT 0 | (open drain) |