FXO CoaXPress

fxo541CCX



□□

□□□	fxo541CCX
□□□□□	F002087
□□□□□□	FXO CoaXPress
□□□□□	Available

□□□□

□□□□□□□	Area scan
□□□	Color
□□□□□	Visible
□□□□□□□	400 nm to 1000 nm
□□□	4,480 × 4,504 (20.20 MP)
□□□□□□□	Sony IMX541
□□□□□□□□□□	cmos
□□□□□□□□	Global shutter (GS)
□□□□□□□	12.28 × 12.34 mm (17.41 mm, Type 1.1)
□□□□□□□	2.74 µm × 2.74 µm

□□□□□□□□□□

□□□□□□□□□	8-bit, 12-bit
RGB□□□□□□□□□□	bayer8, bayer12

□□□□□□□□

□□□□□□□□□	72 dB
SNR	39.8 dB

Allied Vision

□□□□□□□□□□

□□□□□□□□□□	35.7 fps
□□□□	21 µs to 60 s
□□□	0.0 dB to 48.0 dB

I/O□□□

□□□□	0 x LVDS input, 0 x LVDS output, 0 x TTL input, 0 x TTL output, 2 x 24V input, 4 x Open drain output,
□□□□□□□□	1 x RS232 input, 1 x RS232 output, 0 x RS422 input, 0 x RS422 output,
□□□□	1 x Optical isolated input, 0 x Optical isolated input,
I/O□□□□	12-pin Hirose HR10A-10P-12S
□□	10 to 25VDC, Power over CoaXPress
□□□□	External: 8 W (typical)

□□□□

□□□□□□□□□	-10 °C to 65 °C

□□□□□

□□□□□L x W x H mm□	70 × 50 × 50
□□□□□/□□□□□	IR-Cut - 680nm
IP□□	IP30
□□□□□□□□	C-Mount
□□	240 g

□□□□□□□□□FPGA

□□□□□□□□□□□□□□□□	32 MByte

□□□□□□□□

□□□□□□□□□□□□□□	cxp-12 with 1 connection
□□□□□□□□□□□□□□	(micro-BNC)
□□□□□□□	CoaXPress 2.0

FW□□ - □□□□

□□□□□	manual, auto, external
□□□□□□□	auto, manual

FW□□ - □□□□

□□□□□□□□□□□□	auto, manual
□□□□□□□	roi, lut, mirror-image

FW□□ - □□□□□

□□□□□□□□/□□	internal, software, external
□□□□□□□□	PoCxP, User Sets, PWM(4), Sequencer,

Quantum Efficiency

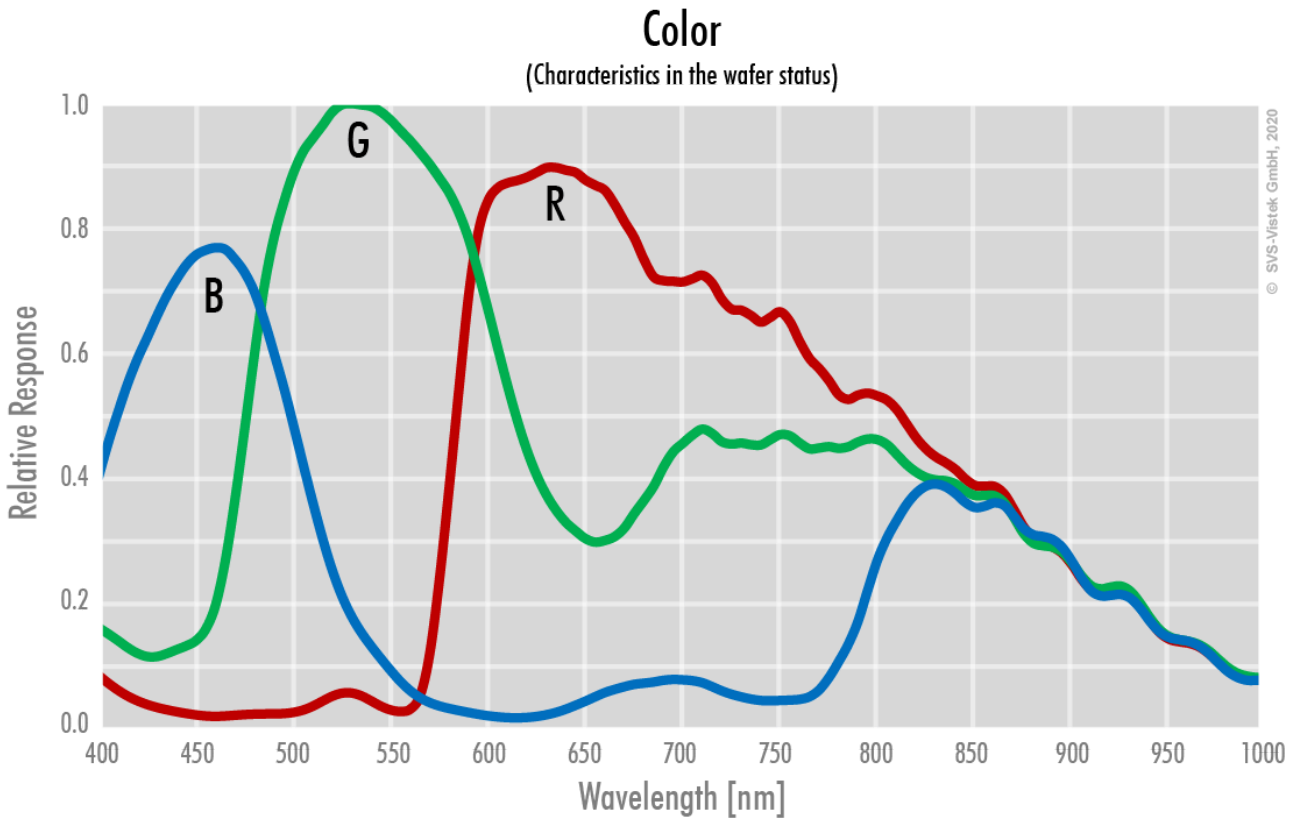

Technical Drawing

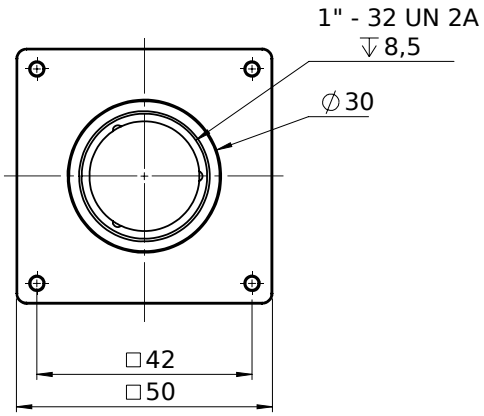

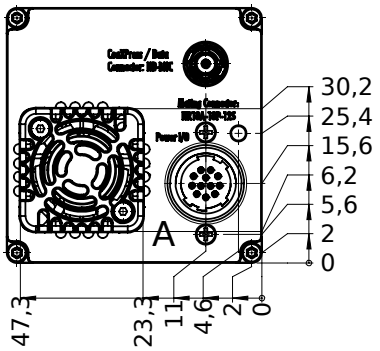

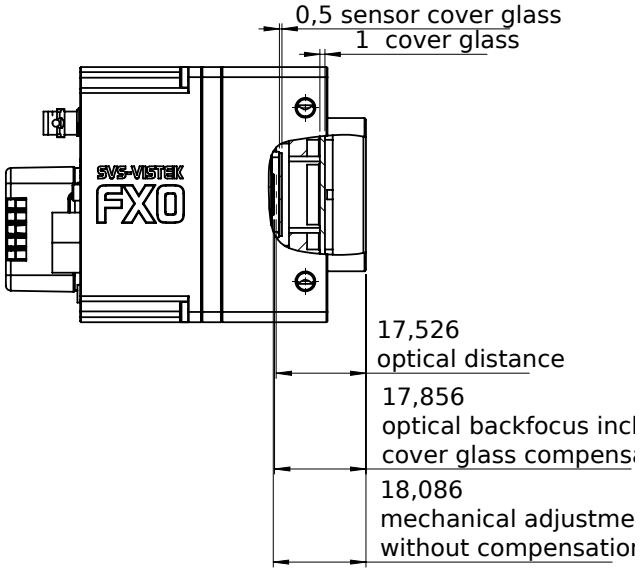

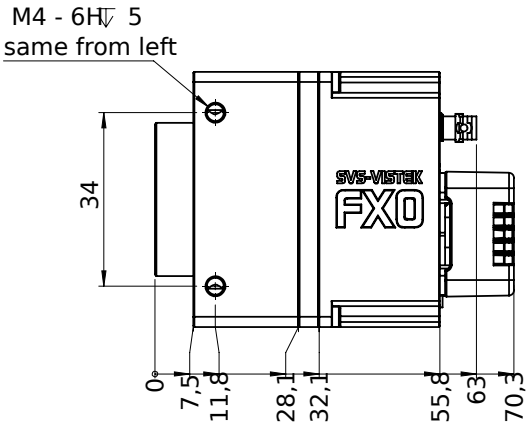

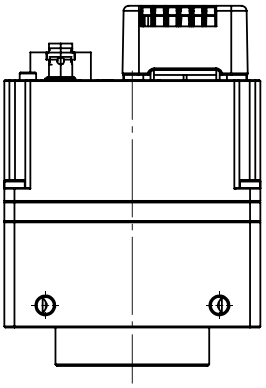

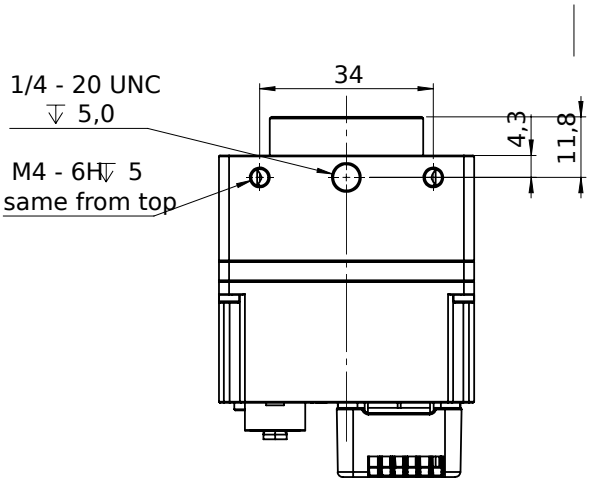

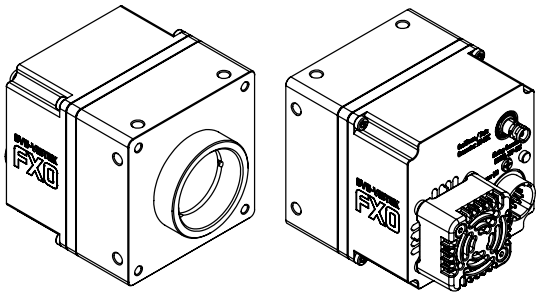

I/O pin assignment

Hirose 12 Pin

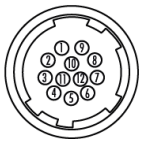

1	VIN –	(GND)	7	OUT 1	(open drain)
2	VIN +	(10 V to 25 V DC)	8	OUT 2	(open drain)
3	IN 4	(RXD RS232)	9	IN 3 +	(opto In +)
4	OUT 4	(TXD RS232)	10	IN 3 –	(opto In –)
5	IN 1	(0 - 24V)	11	OUT 3	(open drain)
6	IN 2	(0 - 24V)	12	OUT 0	(open drain)