FXO 10GigE

fxo542MXGE



□□

□□□	fxo542MXGE
□□□□□□	F002094
□□□□□□□	FXO 10GigE
□□□□□	Available

□□□□

□□□□□□□□	Area scan
□□□	Mono
□□□□□	Visible
□□□□□□□□	400 nm to 1000 nm
□□□	5,320 × 3,032 (16.10 MP)
□□□□□□□□	Sony IMX542
□□□□□□□□□□□	cmos
□□□□□□□□□	Global shutter (GS)
□□□□□□□□	14.58 × 8.31 mm (16.78 mm, Type 1.1)
□□□□□□□□	2.74 µm × 2.74 µm

□□□□□□□□□□

□□□□□□□□□□	8-bit, 12-bit
□□□□□□□□□□□□□□□□	mono8, mono12

□□□□□□□□

□□□□□□□□□□	72 dB
SNR	39.15 dB

Allied Vision

□□□□□□□□□□

□□□□□□□□□□	45.6 fps
□□□□	21 µs to 60 s
□□□	0.0 dB to 48.0 dB

I/O□□□

□□□□	0 x LVDS input, 0 x LVDS output, 0 x TTL input, 0 x TTL output, 2 x 24V input, 4 x Open drain output,
□□□□□□□	1 x RS232 input, 1 x RS232 output, 0 x RS422 input, 0 x RS422 output,
□□□□	1 x Optical isolated input, 0 x Optical isolated input,
I/O□□□□	12-pin Hirose HR10A-10P-12S
□□	10 to 25VDC, Power over Ethernet
□□□□	External: 9 W (typical)

□□□□

□□□□	-10 °C to 60 °C (□□)

□□□□□

□□□□□L x W x H mm□	76 × 50 × 50
□□□□□/□□□□□	K9 - AR coating - 400-850nm
IP□□	IP30
□□□□□□□	C-Mount
□□	240 g

□□□□□□□□□FPGA

□□□□□□□RAM□	896 MByte
□□□□□□□□□□□□□□□	32 MByte

□□□□□□□□

□□□□□□□□□□□□□	10gige
□□□□□□□□□□□□□	(RJ-45)
□□□□□□	GigE Vision 2.0

FW□□ - □□□□

□□□□□	manual, auto, external

FW□□ - □□□□

□□□□□□□	auto, manual
□□□□□□□	roi, lut, mirror-image, dpc, shading-correction, ffc

FW□□ - □□□□□

□□□□□□□□/□□	internal, software, external
□□□□□□□□	PTP, User Sets, POE, PWM(4), Sequencer,

Quantum Efficiency

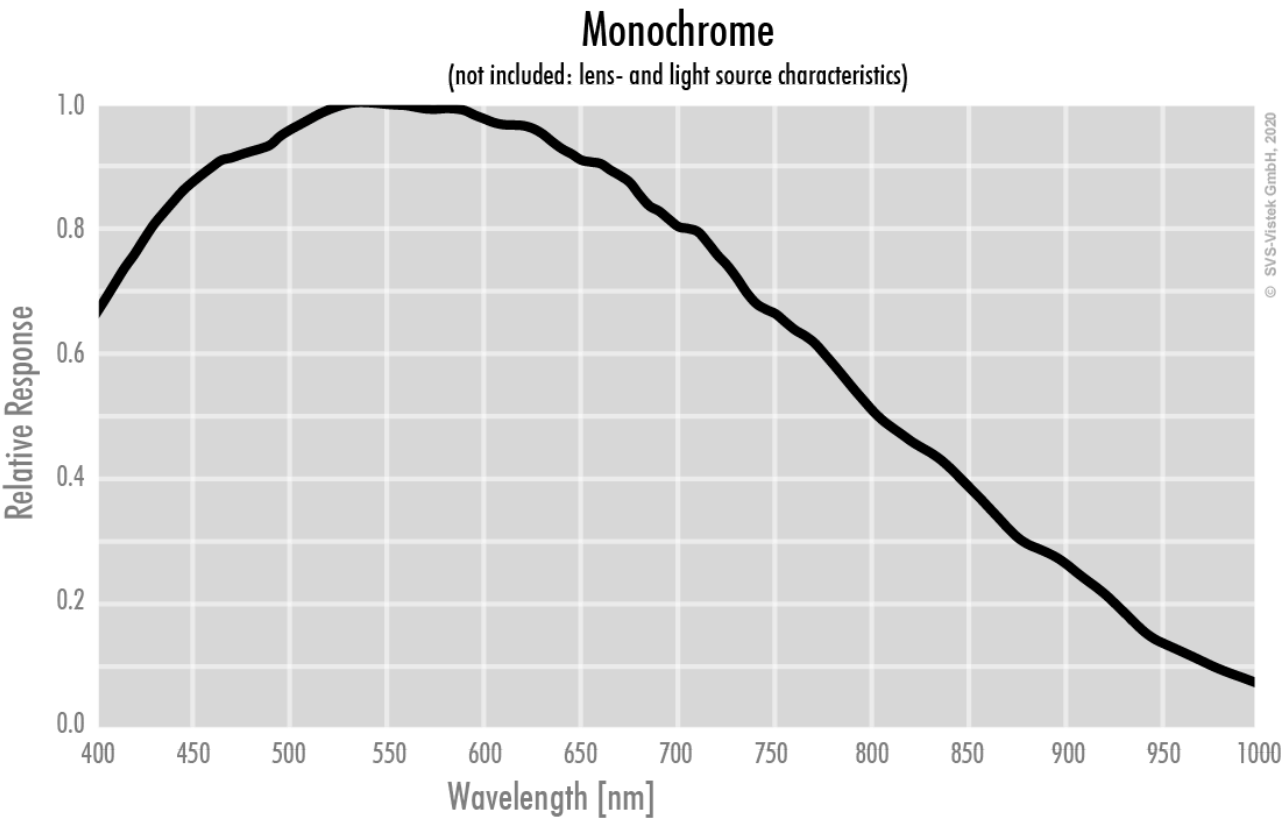

Technical Drawing

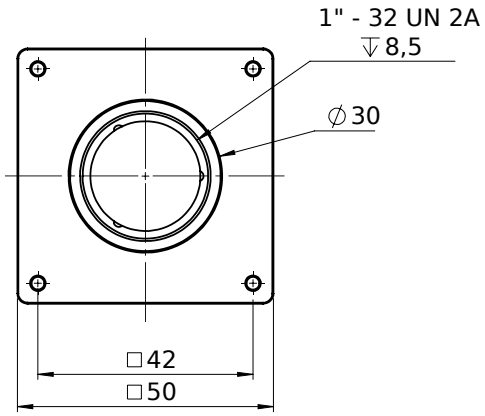

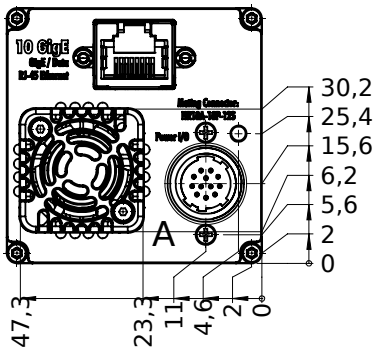

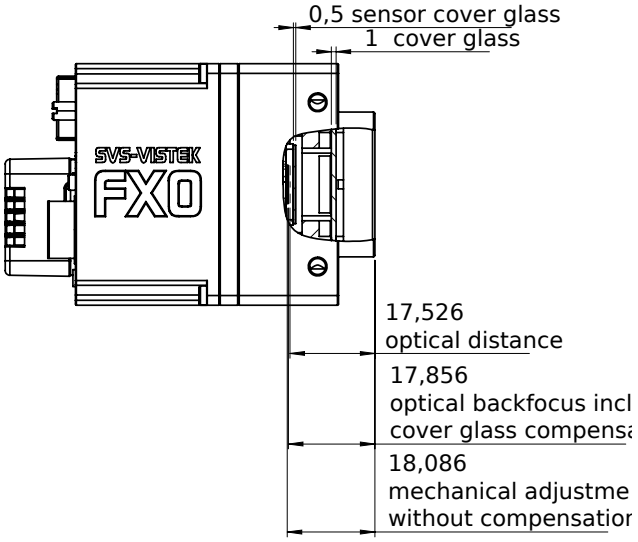

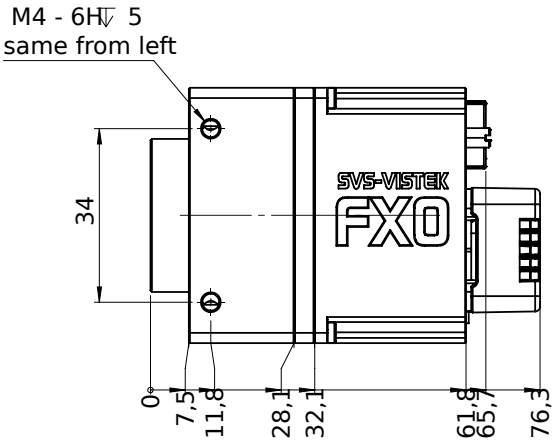

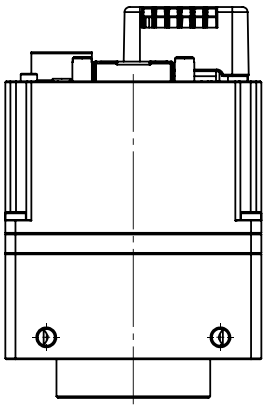

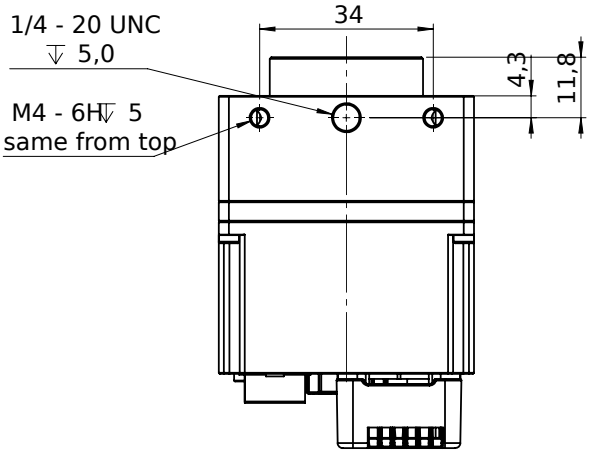

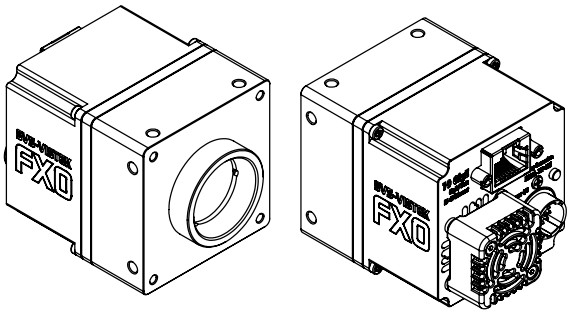

I/O pin assignment

Hirose 12 Pin

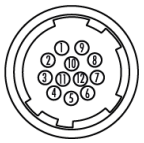

1	VIN –	(GND)	7	OUT 1	(open drain)
2	VIN +	(10 V to 25 V DC)	8	OUT 2	(open drain)
3	IN 4	(RXD RS232)	9	IN 3 +	(opto In +)
4	OUT 4	(TXD RS232)	10	IN 3 –	(opto In –)
5	IN 1	(0 - 24V)	11	OUT 3	(open drain)
6	IN 2	(0 - 24V)	12	OUT 0	(open drain)