# EXO USB3

## exo901CU3



| □□ | |
|---|---|
| □□□ | exo901CU3 |
| □□□□□ | F002369 |
| □□□□□□ | EXO USB3 |
| □□□□□ | Available |

| □□□□ | |
|---|---|
| □□□□□□□ | Area scan |
| □□□ | Color |
| □□□□□ | Visible |
| □□□□□□□ | 400 nm to 1000 nm |
| □□□ | 8,016 × 2,048 (16.40 MP) |
| □□□□□□□ | Sony IMX901 |
| □□□□□□□□□□ | cmos |
| □□□□□□□□ | Global shutter (GS) |
| □□□□□□□ | 21.96 × 5.61 mm (22.67 mm, Type 1.4) |
| □□□□□□□ | 2.74 µm × 2.74 µm |

| □□□□□□□□□□ | |
|---|---|
| □□□□□□□□□ | 8-bit, 12-bit |
| RGB□□□□□□□□□□ | bayer8, bayer12packed |

| □□□□□□□□□ | |
|---|---|
| □□□□□□□□□ | 15 fps |
| □□□□ | 5 µs to 60 s |
| □□□ | 0.0 dB to 48.0 dB |

## I/O□□□

| | |
|---|---|
| □□□□ | 0 x LVDS input, 0 x LVDS output, 0 x TTL input, 0 x TTL output, 2 x 24V input, 4 x Open drain output, |
| □□□□□□□ | 1 x RS232 input, 1 x RS232 output, 0 x RS422 input, 0 x RS422 output, |
| □□□□ | 1 x Optical isolated input, 0 x Optical isolated input, |
| I/O□□□□ | 12-pin Hirose HR10A-10P-12S |
| □□ | 10 to 25VDC |
| □□□□ | External: 5 W (typical) |

## □□□□

| | |
|---|---|
| □□□□ | -10 °C to 65 °C (□□) |

## □□□□□

| | |
|---|---|
| □□□□□L x W x H mm□ | 43 × 50 × 50 |
| □□□□□/□□□□□ | None |
| IP□□ | IP40 |
| □□□□□□□ | C-Mount |
| □□ | 140 g |

## □□□□□□□□FPGA

| | |
|---|---|
| □□□□□□□RAM□ | 192 MByte |
| □□□□□□□□□□□□□□□ | 32 MByte |

## □□□□□□□□

| | |
|---|---|
| □□□□□□□□□□□□ | usb3.0 |
| □□□□□□□□□□□□ | (Micro-B) |
| □□□□□□ | USB3 Vision |

## FW□□ - □□□□

| | |
|---|---|
| □□□□□ | manual, auto, external |
| □□□□□□ | auto, manual |
| □□□□□□□□□□ | auto, manual |
| □□□□□□ | roi, lut, mirror-image, dpc, shading-correction |

## FW□□ - □□□□□

| | |
|---|---|
| □□□□□□□/□□ | internal, software, external |
| □□□□□□□ | User Sets, PWM(4), Sequencer, |

## Quantum Efficiency

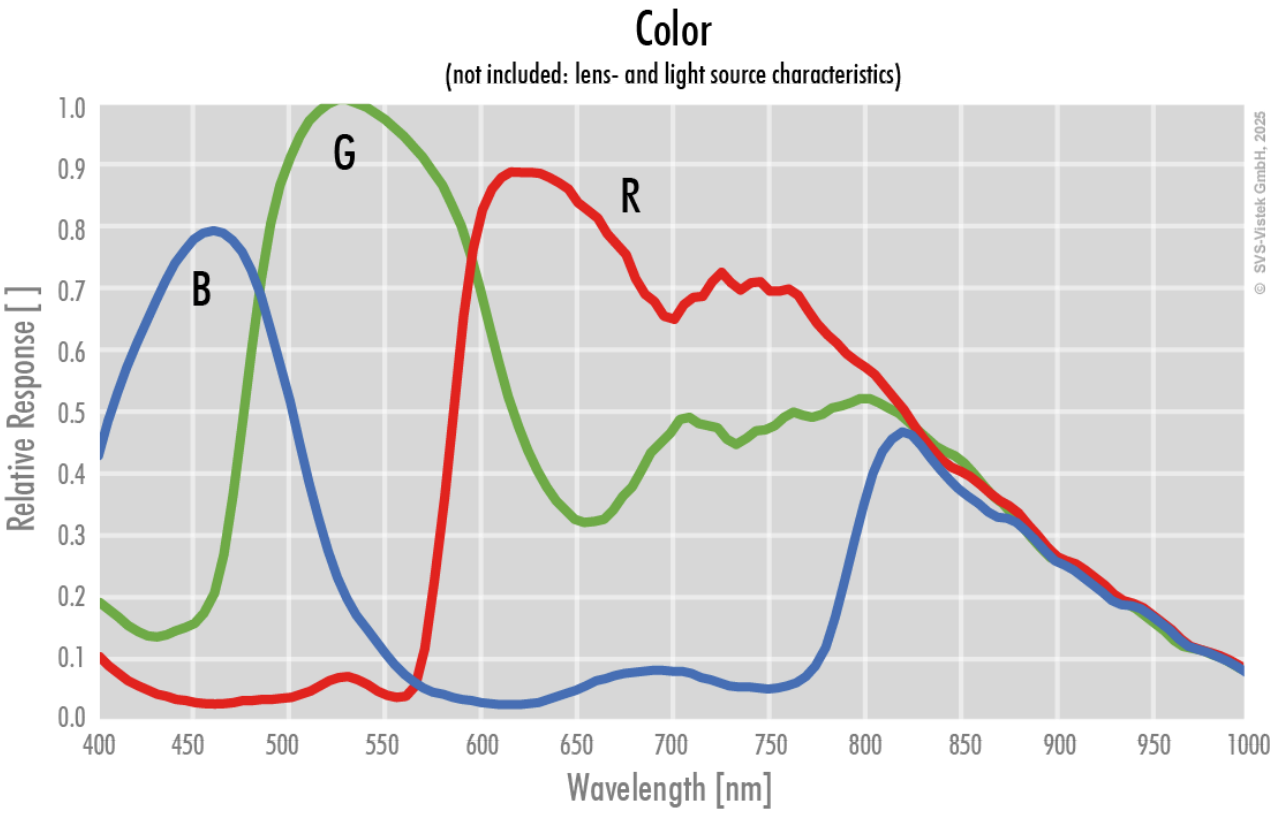

# Technical Drawing

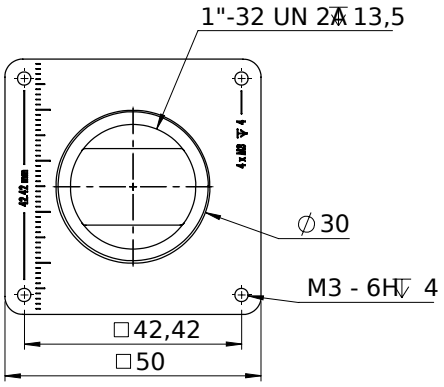


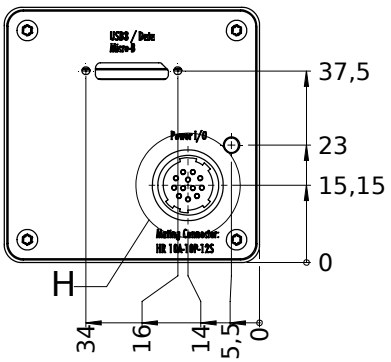


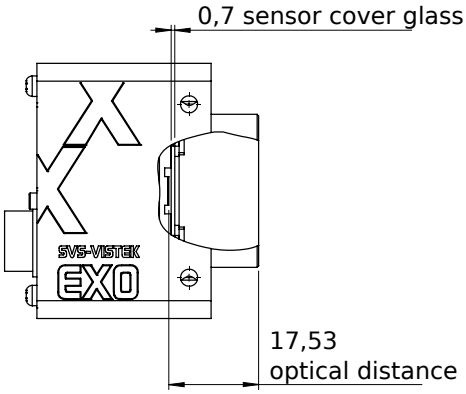


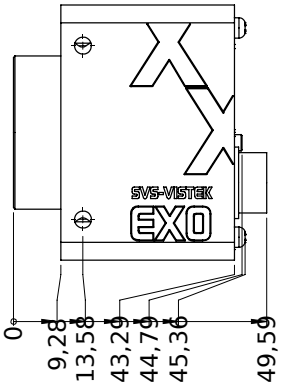

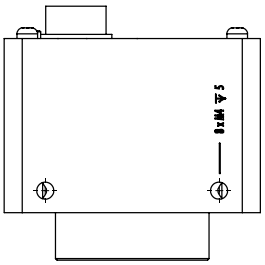

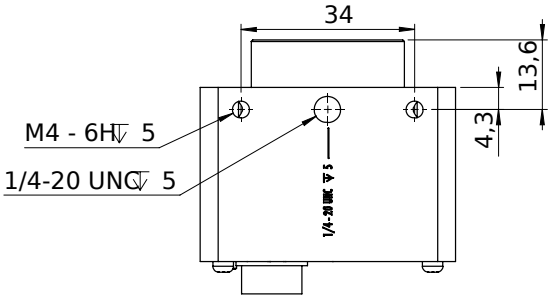


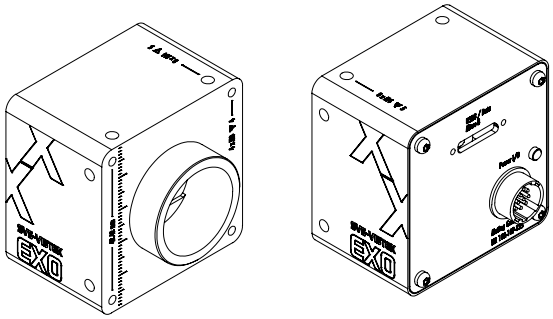

## I/O pin assignment

Hirose 12 Pin

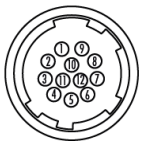

| | | | | | |
|---|---|---|---|---|---|
| 1 | VIN – | (GND) | 7 | OUT 1 | (open drain) |
| 2 | VIN + | (10 V to 25 V DC) | 8 | OUT 2 | (open drain) |
| 3 | IN 4 | (RXD RS232) | 9 | IN 3 + | (opto In + ) |
| 4 | OUT 4 | (TXD RS232) | 10 | IN 3 – | (opto In –) |
| 5 | IN 1 | (0 - 24V) | 11 | OUT 3 | (open drain) |
| 6 | IN 2 | (0 - 24V) | 12 | OUT 0 | (open drain) |