EXO USB3

exo342CU3



□□

□□□	exo342CU3
□□□□□	F001967
□□□□□□	EXO USB3
□□□□□	Available

□□□□

□□□□□□□	Area scan
□□□	Color
□□□□□	Visible
□□□□□□□	400 nm to 1000 nm
□□□	6,464 × 4,852 (31.40 MP)
□□□□□□□	Sony IMX342
□□□□□□□□□□	cmos
□□□□□□□□	Global shutter (GS)
□□□□□□□	22.3 × 16.74 mm (27.88 mm, Type APS-C)
□□□□□□□	3.45 µm × 3.45 µm

□□□□□□□□□□

□□□□□□□□□	8-bit, 12-bit
RGB□□□□□□□□□□	bayer8, bayer12packed

□□□□□□□□

□□□□□□□□□	70.5 dB
SNR	39.9 dB

□□□□□□□□□□

□□□□□□□□□□	12 fps
□□□□	47 µs to 60 s
□□□	0.0 dB to 48.0 dB

I/O□□□

□□□□	0 x LVDS input, 0 x LVDS output, 0 x TTL input, 0 x TTL output, 2 x 24V input, 4 x Open drain output,
□□□□□□□□	1 x RS232 input, 1 x RS232 output, 0 x RS422 input, 0 x RS422 output,
□□□□	1 x Optical isolated input, 0 x Optical isolated input,
I/O□□□□	12-pin Hirose HR10A-10P-12S
□□	10 to 25VDC
□□□□	External: 6 W (typical)

□□□□

□□□□	-10 °C to 65 °C (□□)

□□□□□

□□□□□L x W x H mm□	46 × 58 × 58
□□□□□/□□□□□	K9 - AR coating
IP□□	IP40
□□□□□□□	M42
□□	320 g

□□□□□□□□□FPGA

□□□□□□□RAM□	192 MByte
□□□□□□□□□□□□□□□	32 MByte

□□□□□□□□

□□□□□□□□□□□□□	usb3.0
□□□□□□□□□□□□□	(Micro-B)
□□□□□□□	USB3 Vision

FW□□ - □□□□

□□□□□	manual, auto, external

FW□□ - □□□□

□□□□□□□	auto, manual
□□□□□□□□□□□□	auto, manual
□□□□□□□	roi, lut, mirror-image, dpc, shading-correction

FW□□ - □□□□□

□□□□□□□□/□□	internal, software, external
□□□□□□□□	User Sets, PWM(4), Sequencer,

Quantum Efficiency

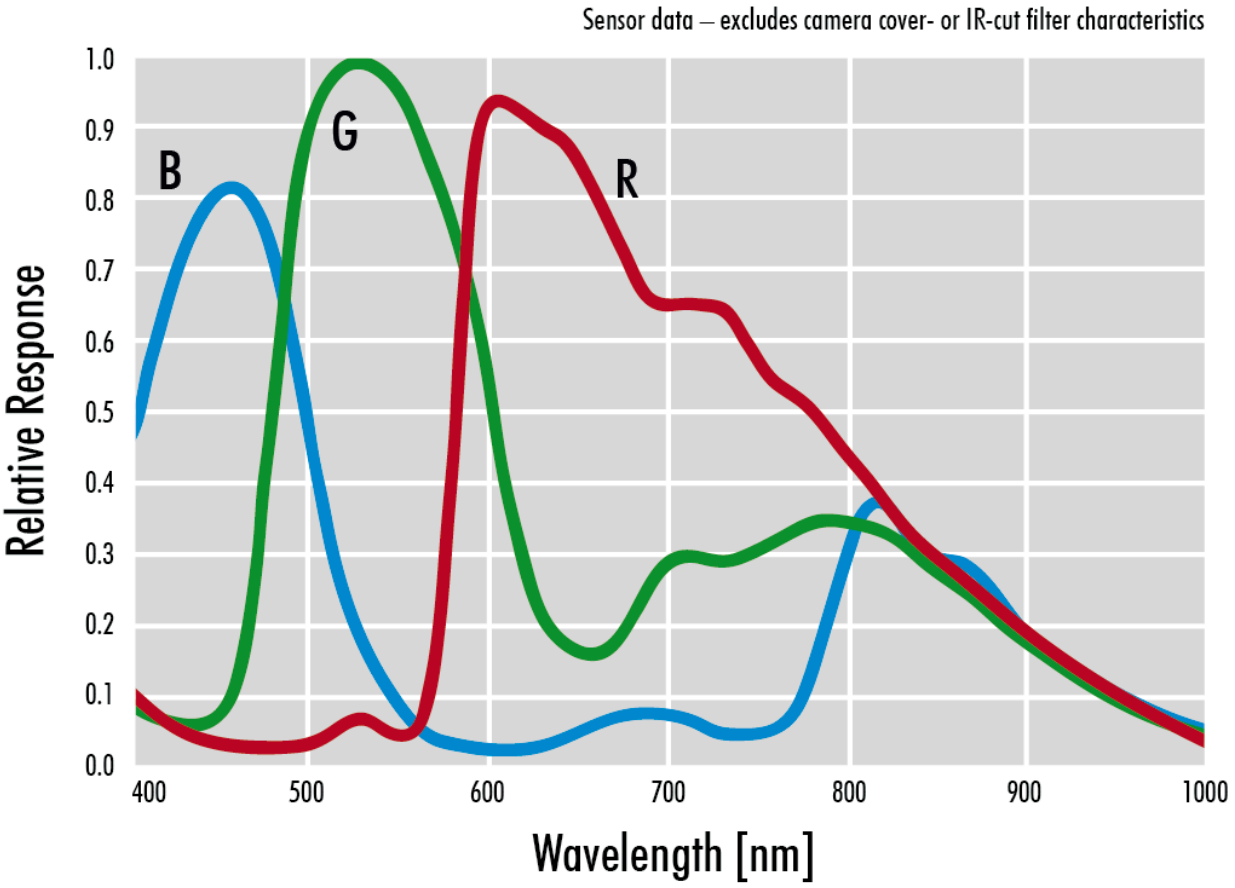

Allied Vision

Technical Drawing

front

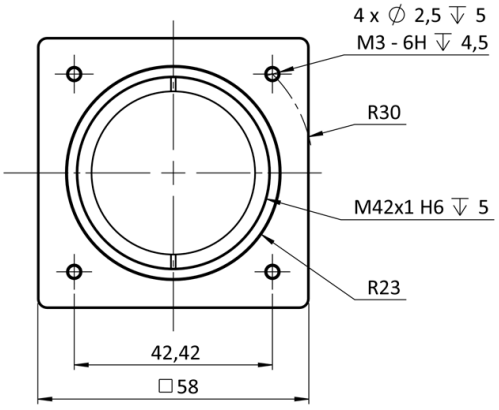

back

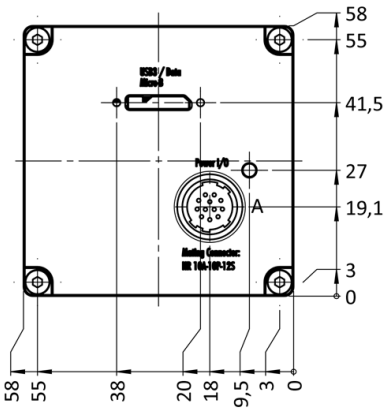

cross section

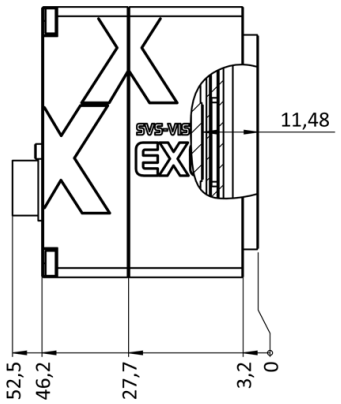

right side



top

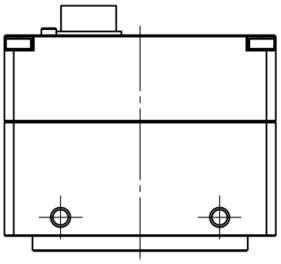

bottom

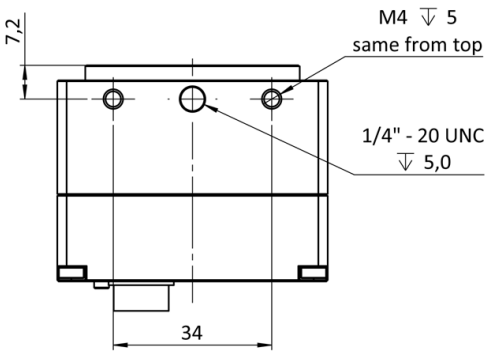

3D

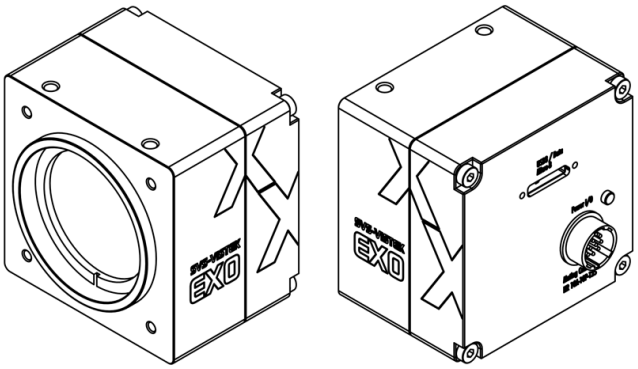

I/O pin assignment

Hirose 12 Pin

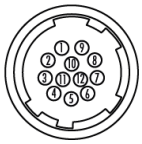

1	VIN –	(GND)	7	OUT 1	(open drain)
2	VIN +	(10 V to 25 V DC)	8	OUT 2	(open drain)
3	IN 4	(RXD RS232)	9	IN 3 +	(opto In +)
4	OUT 4	(TXD RS232)	10	IN 3 –	(opto In –)
5	IN 1	(0 - 24V)	11	OUT 3	(open drain)
6	IN 2	(0 - 24V)	12	OUT 0	(open drain)