EXO USB3

exo183CU3



□□

□□□	exo183CU3
□□□□□	F001799
□□□□□□	EXO USB3
□□□□□	Discontinued

□□□□

□□□□□□□	Area scan
□□□	Color
□□□□□	Visible
□□□□□□□	400 nm to 1000 nm
□□□	5,496 × 3,672 (20.20 MP)
□□□□□□□	Sony IMX183
□□□□□□□□□□	cmos
□□□□□□□□	Rolling shutter (RS)
□□□□□□□	13.19 × 8.81 mm (15.86 mm, Type 1)
□□□□□□□	2.40 µm × 2.40 µm

□□□□□□□□□□

□□□□□□□□□	8-bit, 12-bit
RGB□□□□□□□□□□	bayer8, bayer12packed

□□□□□□□□□

□□□□□□□□□	17 fps
□□□□	17 µs to 60 s
□□□	0.0 dB to 27.0 dB

I/O□□□

□□□□	0 x LVDS input, 0 x LVDS output, 0 x TTL input, 0 x TTL output, 2 x 24V input, 4 x Open drain output,
□□□□□□□	1 x RS232 input, 1 x RS232 output, 0 x RS422 input, 0 x RS422 output,
□□□□	1 x Optical isolated input, 0 x Optical isolated input,
I/O□□□□	12-pin Hirose HR10A-10P-12S
□□	10 to 25VDC
□□□□	External: 5 W (typical)

□□□□

□□□□	-10 °C to 60 °C (□□)

□□□□□

□□□□□L x W x H mm□	43 × 50 × 50
□□□□□/□□□□□	IR-Cut - 680nm
IP□□	IP40
□□□□□□□	C-Mount
□□	140 g

□□□□□□□□□FPGA

□□□□□□□RAM□	192 MByte
□□□□□□□□□□□□□□□	32 MByte

□□□□□□□□

□□□□□□□□□□□□	usb3.0
□□□□□□□□□□□□	(Micro-B)
□□□□□□	USB3 Vision

FW□□ - □□□□

□□□□□	manual, auto
□□□□□□	auto, manual
□□□□□□□□□□□	auto, manual
□□□□□□	roi, lut, mirror-image

FW□□ - □□□□□

□□□□□□□/□□	internal, software, external
□□□□□□□	User Sets, PWM(4), Sequencer,

Quantum Efficiency

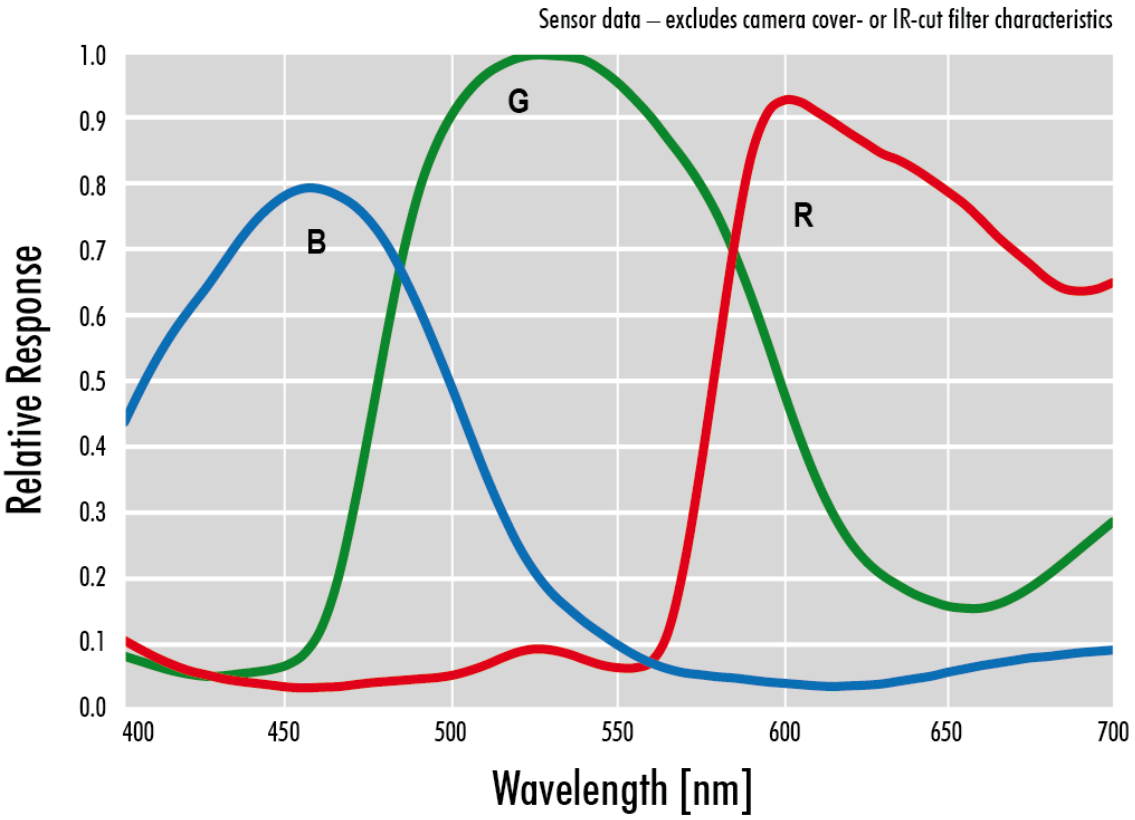

Technical Drawing

front

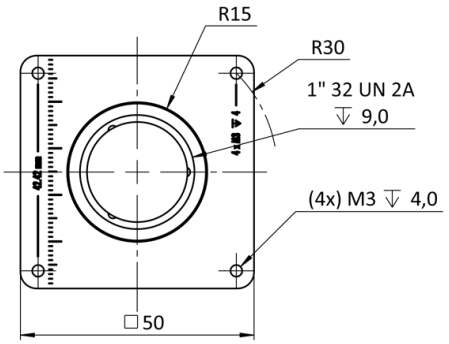

back

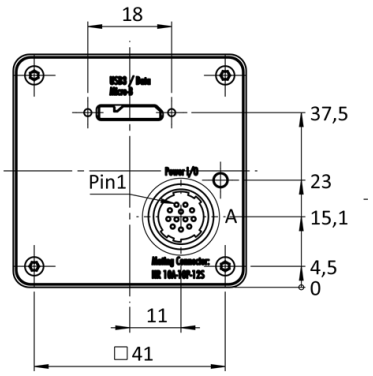

cross section

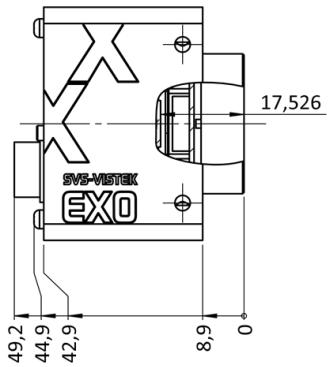

right side

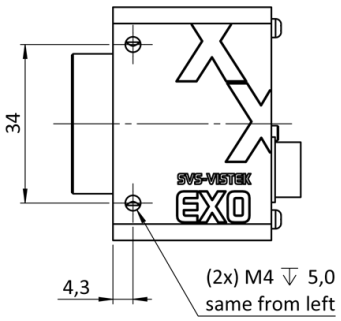

top

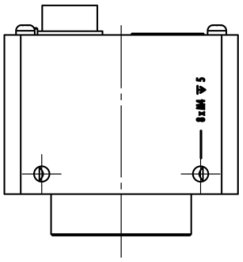

bottom

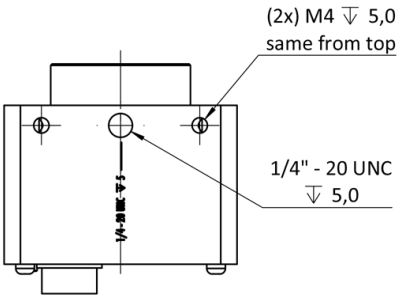

3D

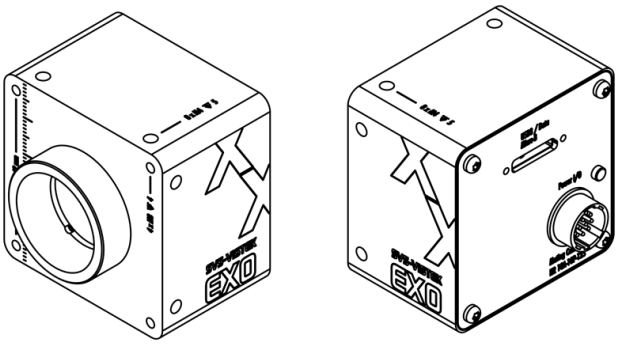

I/O pin assignment

Hirose 12 Pin

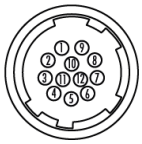

1	VIN –	(GND)	7	OUT 1	(open drain)
2	VIN +	(10 V to 25 V DC)	8	OUT 2	(open drain)
3	IN 4	(RXD RS232)	9	IN 3 +	(opto In +)
4	OUT 4	(TXD RS232)	10	IN 3 –	(opto In –)
5	IN 1	(0 - 24V)	11	OUT 3	(open drain)
6	IN 2	(0 - 24V)	12	OUT 0	(open drain)