EXO GigE

exo901MGE



□□	
□□□	exo901MGE
□□□□□	F002366
□□□□□□	EXO GigE
□□□□□	Available

□□□□	
□□□□□□□	Area scan
□□□	Mono
□□□□□	Visible
□□□□□□□	400 nm to 1000 nm
□□□	8,016 × 2,048 (16.40 MP)
□□□□□□□	Sony IMX901
□□□□□□□□□□	cmos
□□□□□□□□	Global shutter (GS)
□□□□□□□	21.96 × 5.61 mm (22.67 mm, Type 1.4)
□□□□□□□	2.74 µm × 2.74 µm

□□□□□□□□□□	
□□□□□□□□□	8-bit, 12-bit
□□□□□□□□□□□□□□□	mono8, mono12packed

□□□□□□□□□	
□□□□□□□□□	7.5 fps
□□□□□□□□□□□□□□□□	21.5 fps
□□□□	24 µs to 60 s
□□□	0.0 dB to 48.0 dB

I/O□□□

□□□□	0 x LVDS input, 0 x LVDS output, 0 x TTL input, 0 x TTL output, 2 x 24V input, 4 x Open drain output,
□□□□□□□	1 x RS232 input, 1 x RS232 output, 0 x RS422 input, 0 x RS422 output,
□□□□	1 x Optical isolated input, 0 x Optical isolated input,
I/O□□□□	12-pin Hirose HR10A-10P-12S
□□	10 to 25VDC, Power over Ethernet
□□□□	External: 5 W (typical)

□□□□

□□□□	-10 °C to 60 °C (□□)

□□□□□

□□□□□L x W x H mm□	43 × 50 × 50
□□□□□/□□□□□	None
IP□□	IP40
□□□□□□□	C-Mount
□□	140 g

□□□□□□□□FPGA

□□□□□□□RAM□	192 MByte
□□□□□□□□□□□□□□□	32 MByte

□□□□□□□□

□□□□□□□□□□□□□	gige
□□□□□□□□□□□□□	(RJ-45)
□□□□□□□	GigE Vision

FW□□ - □□□□

□□□□□	manual, auto, external
□□□□□□	auto, manual
□□□□□□	roi, lut, mirror-image, dpc, shading-correction, ffc

FW□□ - □□□□□

□□□□□□□/□□	internal, software, external

FW□□ - □□□□□

□□□□□□□□	PTP, BurstMode, User Sets, POE, PWM(4), Sequencer,

Quantum Efficiency

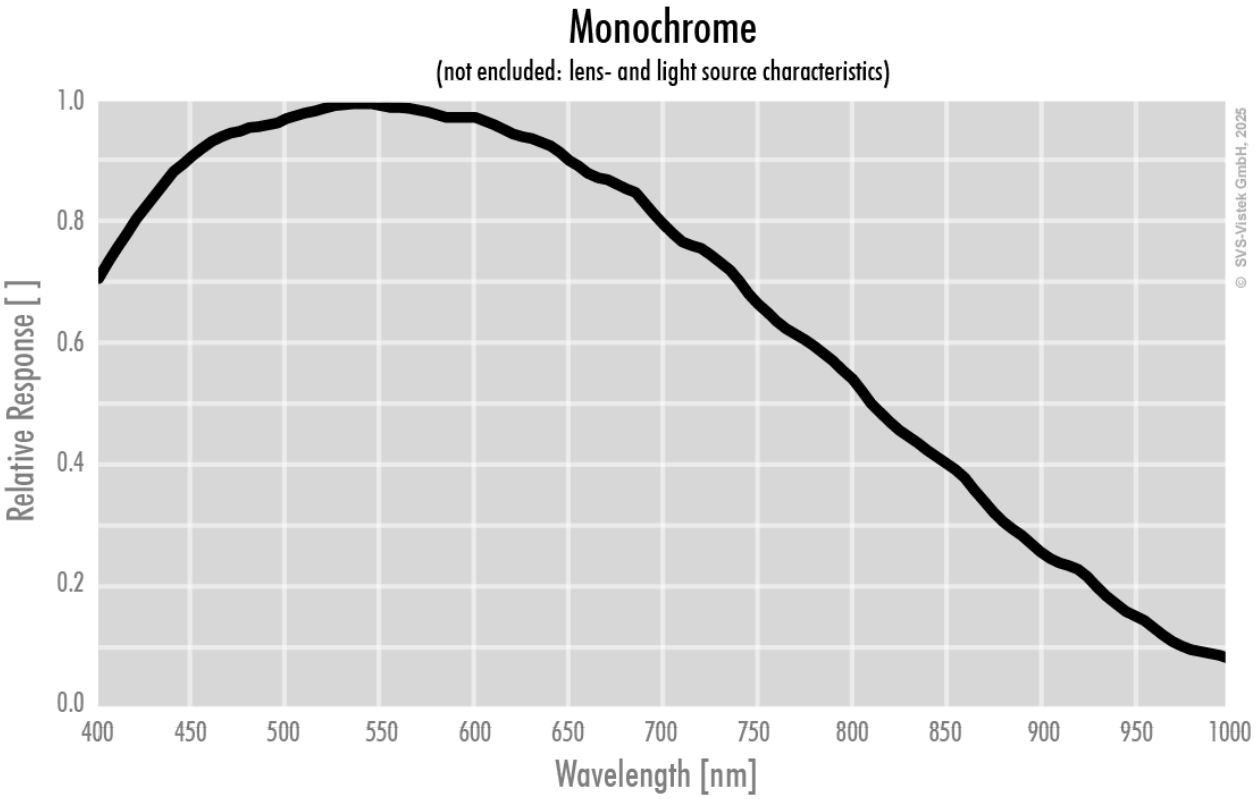

Technical Drawing

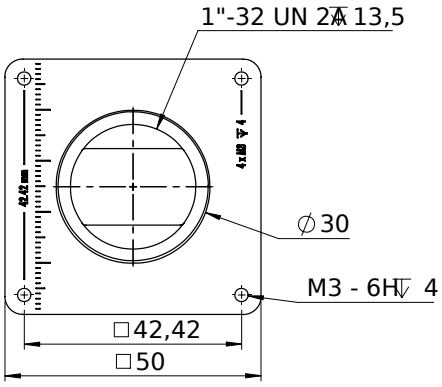

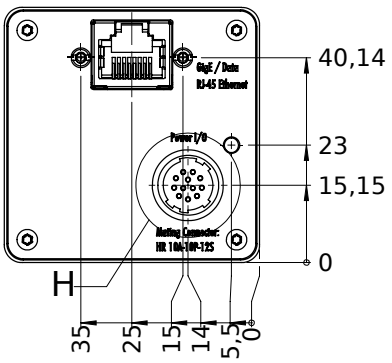

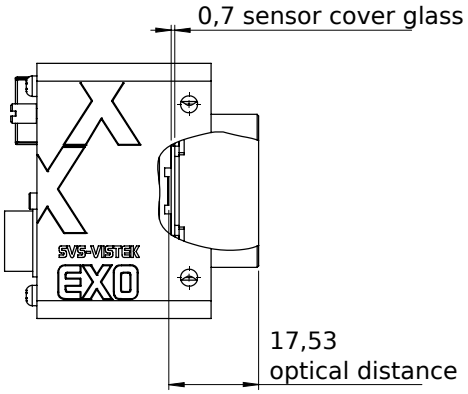

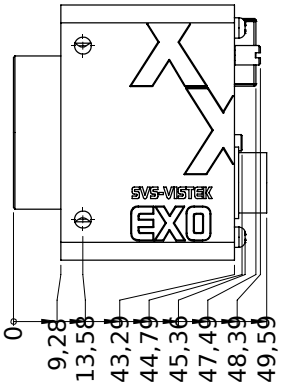

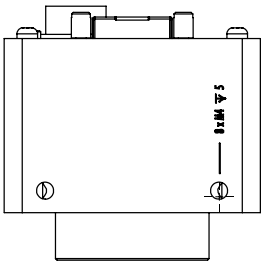

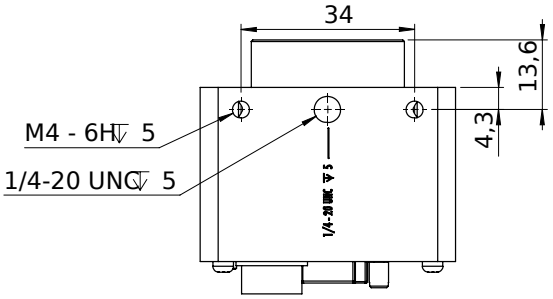

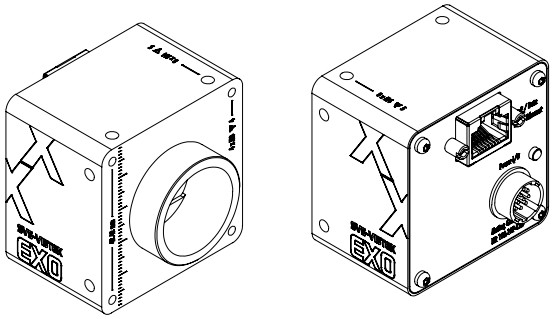

I/O pin assignment

Hirose 12 Pin

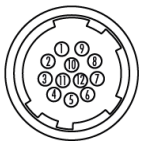

1	VIN –	(GND)	7	OUT 1	(open drain)
2	VIN +	(10 V to 25 V DC)	8	OUT 2	(open drain)
3	IN 4	(RXD RS232)	9	IN 3 +	(opto In +)
4	OUT 4	(TXD RS232)	10	IN 3 –	(opto In –)
5	IN 1	(0 - 24V)	11	OUT 3	(open drain)
6	IN 2	(0 - 24V)	12	OUT 0	(open drain)