EXO Camera Link

exo304MCL



□□	
□□□	exo304MCL
□□□□□	F001765
□□□□□□	EXO Camera Link
□□□□□	Available

□□□□	
□□□□□□□	Area scan
□□□	Mono
□□□□□	Visible
□□□□□□□	400 nm to 1000 nm
□□□	4,096 × 3,000 (12.30 MP)
□□□□□□□	Sony IMX304
□□□□□□□□□□	cmos
□□□□□□□□	Global shutter (GS)
□□□□□□□	14.13 × 10.35 mm (17.52 mm, Type 1.1)
□□□□□□□	3.45 µm × 3.45 µm

□□□□□□□□□□	
□□□□□□□□□	8-bit, 12-bit
□□□□□□□□□□□□□□□	mono8, mono12

□□□□□□□□	
□□□□□□□□□	72 dB
SNR	39.5 dB

□□□□□□□□□□

□□□□□□□□□□	20 fps
□□□□	29 µs to 60 s
□□□	0.0 dB to 48.0 dB

I/O□□□

□□□□	0 x LVDS input, 0 x LVDS output, 0 x TTL input, 0 x TTL output, 2 x 24V input, 4 x Open drain output,
□□□□□□□□	1 x RS232 input, 1 x RS232 output, 0 x RS422 input, 0 x RS422 output,
□□□□	1 x Optical isolated input, 0 x Optical isolated input,
I/O□□□□	12-pin Hirose HR10A-10P-12S
□□	10 to 25VDC
□□□□	External: 4 W (typical)

□□□□

□□□□	-10 °C to 60 °C (□□)

□□□□□

□□□□□L x W x H mm□	43 × 50 × 50
□□□□□/□□□□□	K9 - AR coating - 400-850nm
IP□□	IP40
□□□□□□□□	C-Mount
□□	140 g

□□□□□□□□□FPGA

□□□□□□□RAM□	192 MByte
□□□□□□□□□□□□□□□□	32 MByte

□□□□□□□□

□□□□□□□□□□□□□	Camera Link Base
□□□□□□□□□□□□□	(MDR)

FW□□ - □□□□

□□□□□	manual, auto, external
□□□□□□	auto, manual

FW□□ - □□□□

□□□□□□□	roi, lut, mirror-image

FW□□ - □□□□□

□□□□□□□□/□□	internal, software, external
□□□□□□□□	User Sets, PWM(4), Sequencer,

Quantum Efficiency

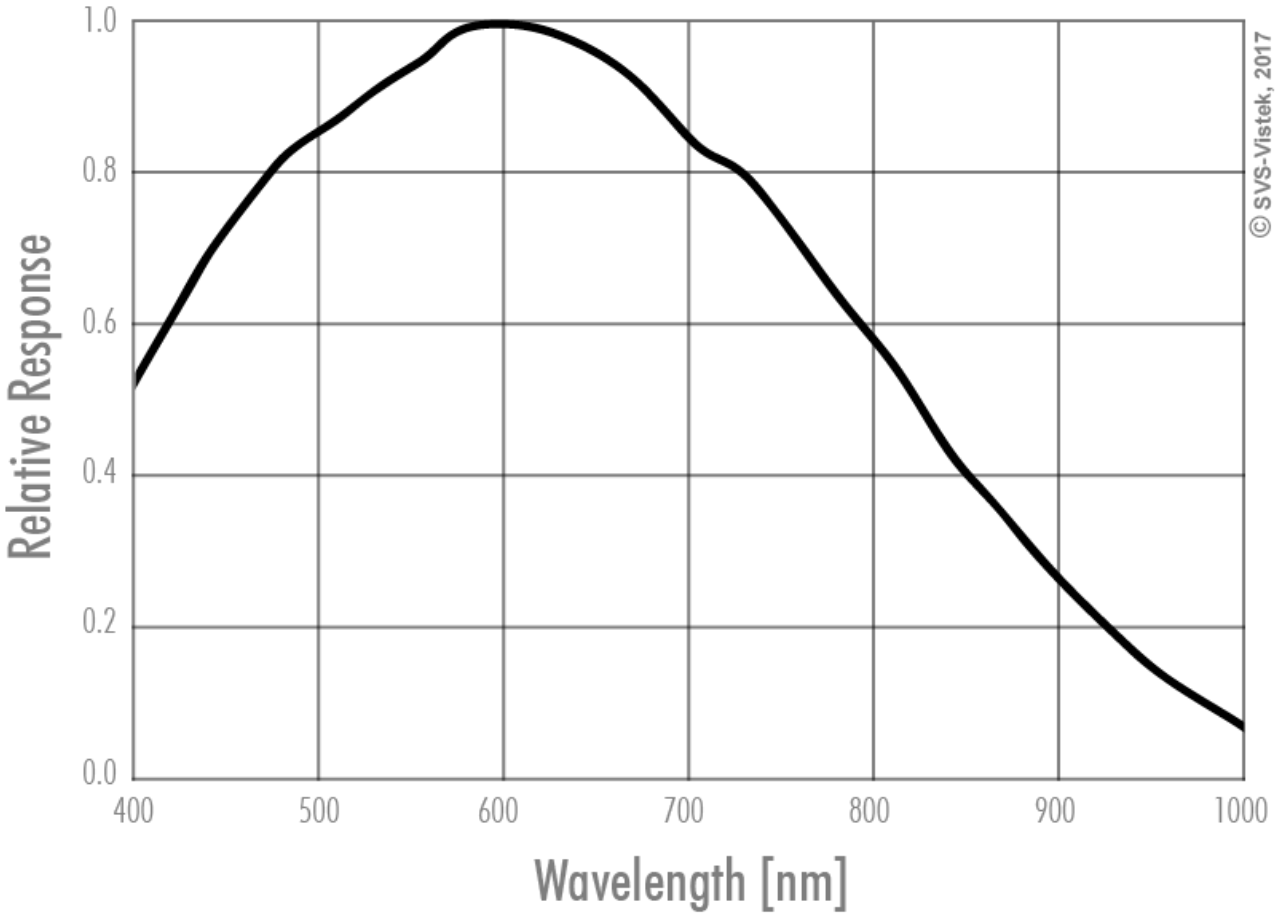

Allied Vision

Technical Drawing

front

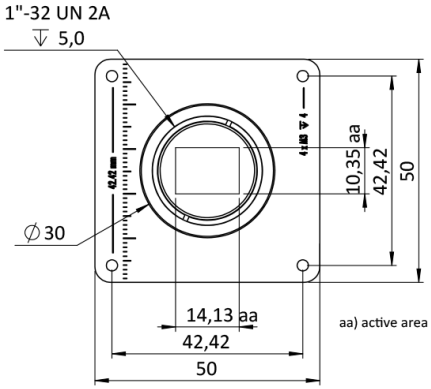

back

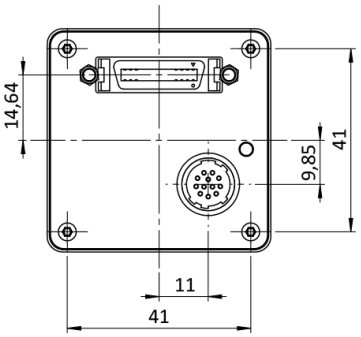

right side

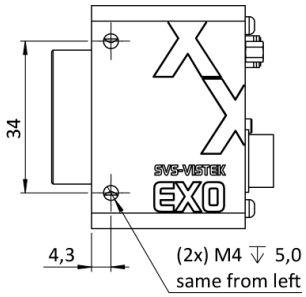

bottom

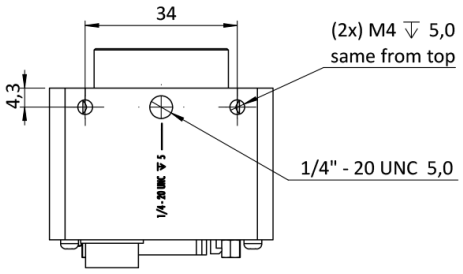

left side

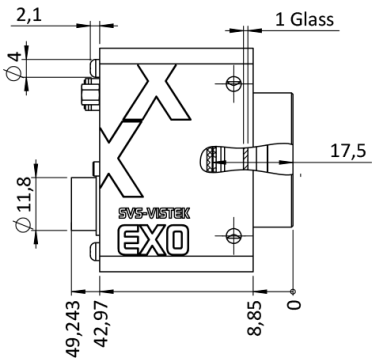

I/O pin assignment

Hirose 12 Pin

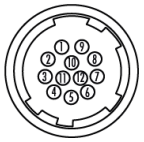

1	VIN –	(GND)	7	OUT 1	(open drain)
2	VIN +	(10 V to 25 V DC)	8	OUT 2	(open drain)
3	IN 4	(RXD RS232)	9	IN 3 +	(opto In +)
4	OUT 4	(TXD RS232)	10	IN 3 –	(opto In –)
5	IN 1	(0 - 24V)	11	OUT 3	(open drain)
6	IN 2	(0 - 24V)	12	OUT 0	(open drain)