Allied Vision



EoSens CoaXPress-12

EoSens1.1MCX12-CM

□□	
□□□	EoSens1.1MCX12-CM
□□□□□	F006001
□□□□□□	EoSens CoaXPress-12
□□□□□	Available

□□□	
□□□□□□□	Area scan
□□□	Mono
□□□□□	Visible
□□□□□□□	400 nm to 1000 nm
□□□	1,280 × 864 (1.10 MP)
□□□□□□□	Luxima LUX13HS
□□□□□□□□□□	cmos
□□□□□□□□	Global shutter (GS)
□□□□□□□	17.54 × 11.84 mm (21.16 mm, Type 4/3)
□□□□□□□	13.70 µm × 13.70 µm

□□□□□□□□□□	
□□□□□□□□□	8-bit, 10-bit
□□□□□□□□□□□□□□□	mono8, mono10

□□□□□□□□□	
□□□□□□□□□	3674 fps
□□□□□□□□□ ROI□□□	1280 x 864 | 3674 fps, 1280 x 768 | 4151 fps, 640 x 480 | 6576 fps, 128 x 128 | 23821 fps, x | 224673 fps,
□□□□	2 µs to 1 s
□□□	0.0 dB to 18.0 dB

I/O□□□

□□□□	0 x LVDS input, 0 x LVDS output, 0 x TTL input, 0 x TTL output, 2 x 24V input, 0 x Open drain output,
□□□□□□□□	0 x RS232 input, 0 x RS232 output, 0 x RS422 input, 0 x RS422 output,
□□□□	0 x Optical isolated input, 0 x Optical isolated input,
I/O□□□□	12-pin Hirose HR10A-10P-12S
□□	12 to 24VDC, Power over CoaXPress
□□□□	External: 14 W (typical)

□□□□

□□□□	-10 °C to 45 °C (□□□□□□□□□□)

□□□□□

□□□□□L x W x H mm□	54 × 80 × 80
IP□□	IP30
□□□□□□□□	C-Mount
□□	500 g

□□□□□□□□

□□□□□□□□□□□□□□	cxp-12 with 4 connections
□□□□□□□□□□□□□□	(micro-BNC)
□□□□□□□	CoaXPress 2.0

FW□□ - □□□□

□□□□□□	external
□□□□□□□	digital, analog
□□□□□□□□□□□□□	true
□□□□□□□	roi, mirror-image

FW□□ - □□□□□

□□□□□□□□/□□	external, trigger-over-cxp

Quantum Efficiency

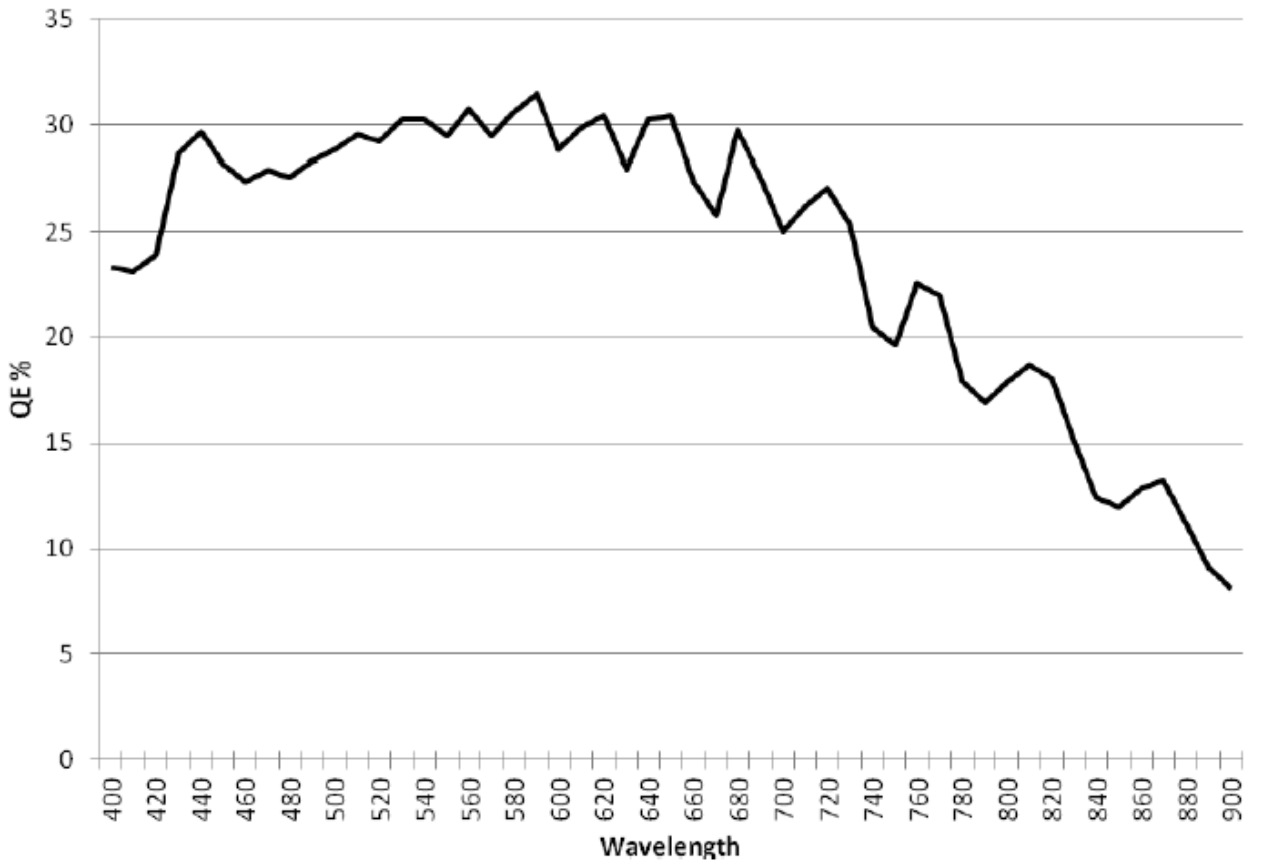

Allied Vision

Technical Drawing

Technical Drawing Front View

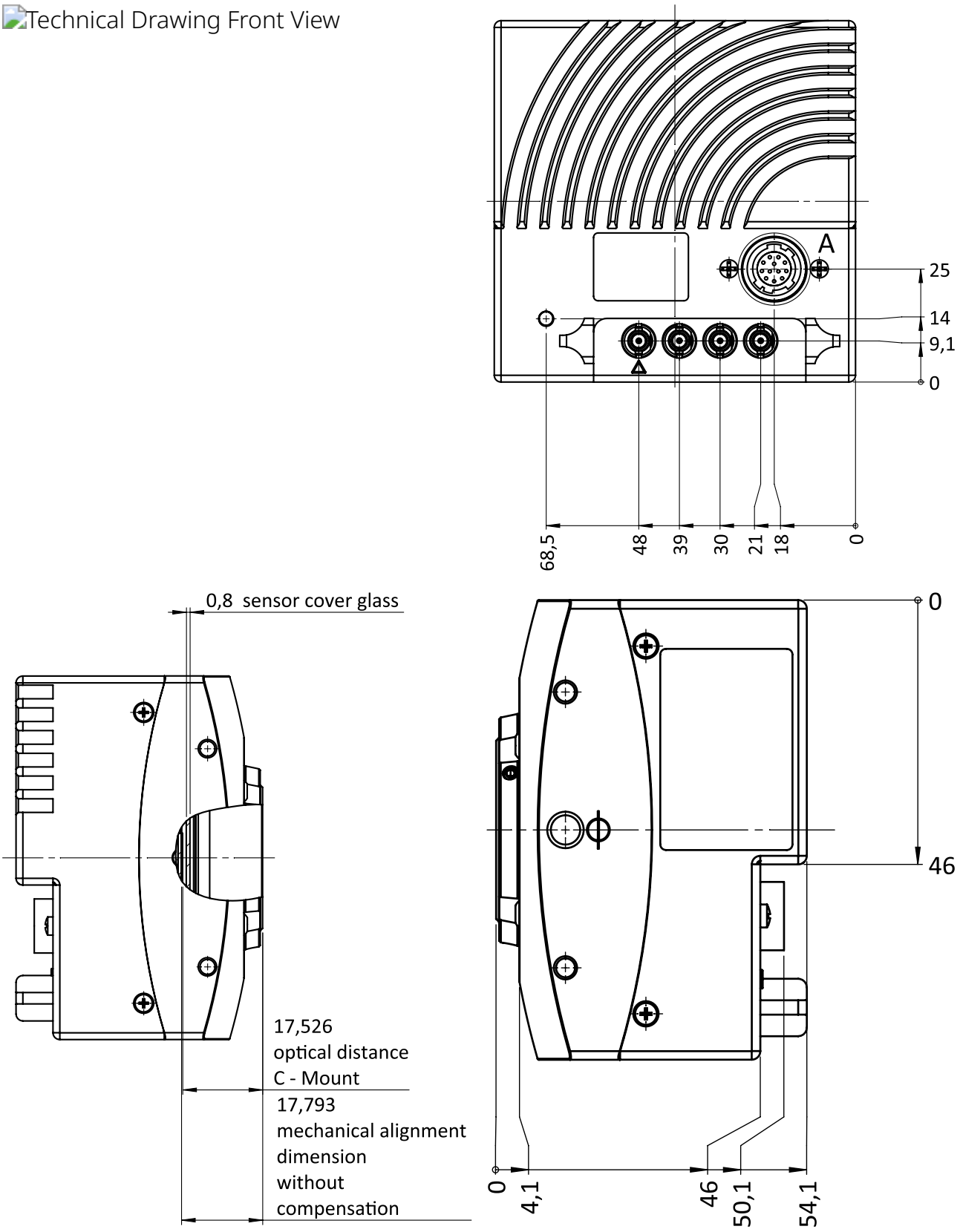

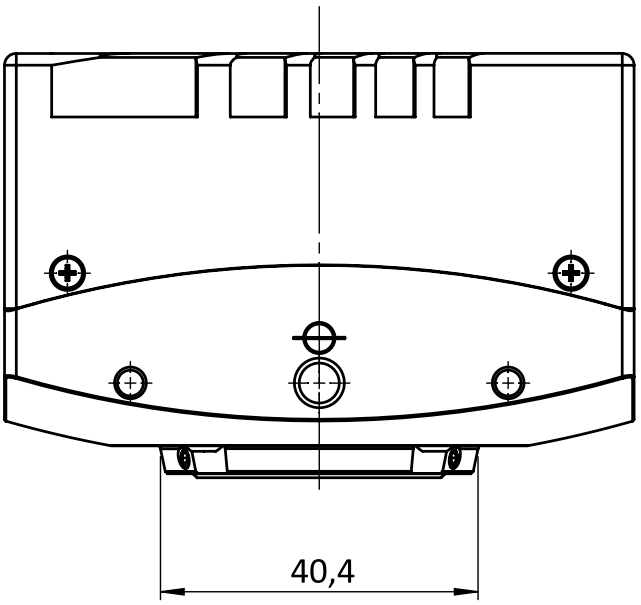

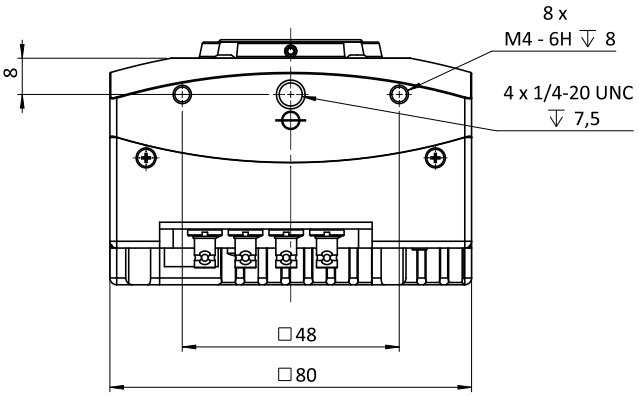

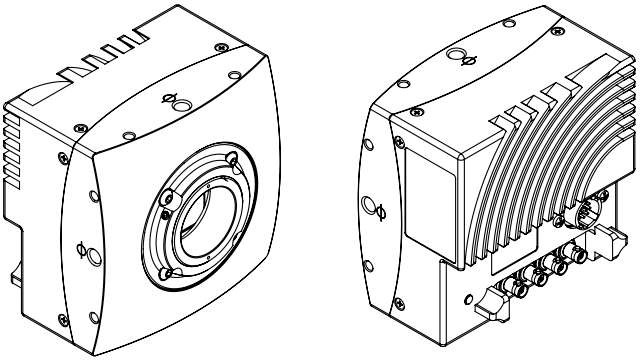

I/O pin assignment

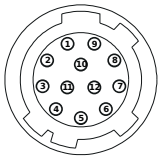

Pin	Signal	Pin	Signal
1 + 12	GND	6	IN0
2 + 11	VCC (12- 24 V)	7	IO_{GND}
3	IO_{GND}	8	OUT1
4	OUT0	9	IO_{GND}
5	IO_{GND}	10	IN1