Allied Vision

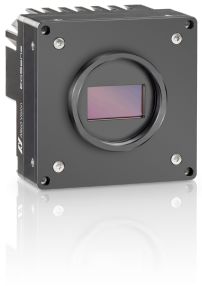

EoSens CoaXPress-12

EoSens10MCX12-M42

□□	
□□□	EoSens10MCX12-M42
□□□□□	F006231
□□□□□□	EoSens CoaXPress-12
□□□□□	Available

□□□□	
□□□□□□□	Area scan
□□□	Mono
□□□□□	Visible
□□□□□□□	350 nm to 1000 nm
□□□	4,608 × 2,176 (10.00 MP)
□□□□□□□	Gpixel GSPRINT4510
□□□□□□□□□□	cmos
□□□□□□□□	Global shutter (GS)
□□□□□□□	20.74 × 9.79 mm (22.93 mm, Type 4/3)
□□□□□□□	4.50 µm × 4.50 µm

□□□□□□□□□□	
□□□□□□□□□	8-bit, 12-bit
□□□□□□□□□□□□□□□	mono8, mono12

□□□□□□□□	
□□□□□□□□□	68.8 dB

□□□□□□□□□	
□□□□□□□□□	482 fps

□□□□□□□□□□

□□□□□□□□□□ ROI□□□	4608 x 2176 | 478 fps,
□□□□	1 µs to 1 s
□□□	0.0 dB to 12.0 dB

I/O□□□

□□□□	0 x LVDS input, 0 x LVDS output, 0 x TTL input, 0 x TTL output, 2 x 24V input, 0 x Open drain output,
□□□□□□□□	0 x RS232 input, 0 x RS232 output, 0 x RS422 input, 0 x RS422 output,
□□□□	0 x Optical isolated input, 0 x Optical isolated input,
I/O□□□□	12-pin Hirose HR10A-10P-12S
□□	12 to 24VDC, Power over CoaXPress
□□□□	External: 20 W (typical)

□□□□

□□□□	-10 °C to 65 °C (□□□□□□□□□□)

□□□□□

□□□□□L x W x H mm□	55 × 80 × 80
IP□□	IP30
□□□□□□□□	M42x0.75
□□	630 g

□□□□□□□□

□□□□□□□□□□□□□□	cxp-12 with 4 connections
□□□□□□□□□□□□□□	(micro-BNC)

FW□□ - □□□□

□□□□□□	external
□□□□□□□	digital, analog
□□□□□□□□□□□□□	true
□□□□□□□	roi, mirror-image

FW□□ - □□□□□

□□□□□□□□/□□	external, trigger-over-cxp

Quantum Efficiency

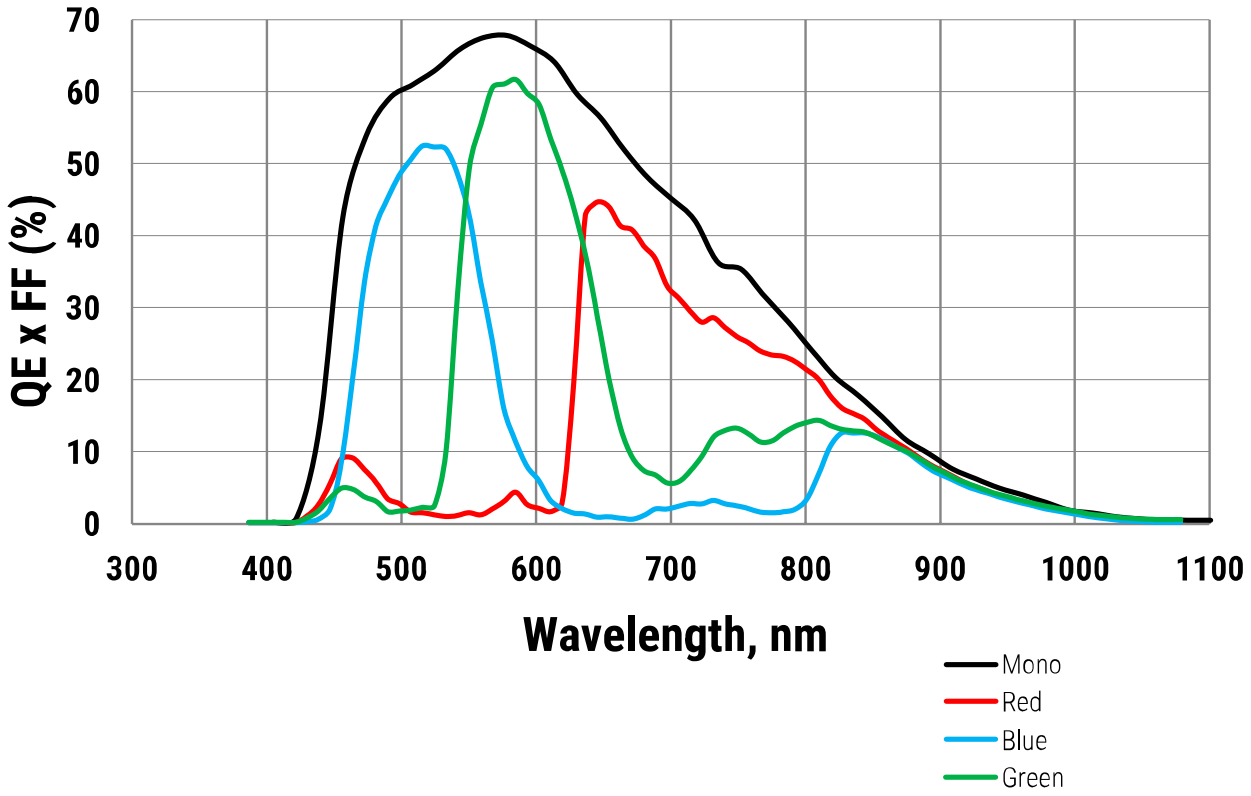

Allied Vision

Technical Drawing

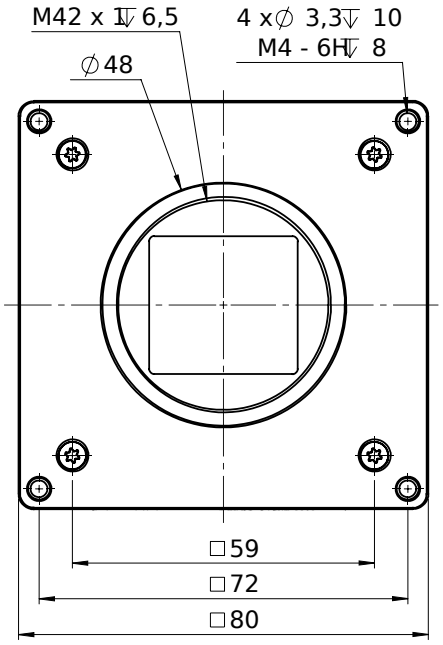

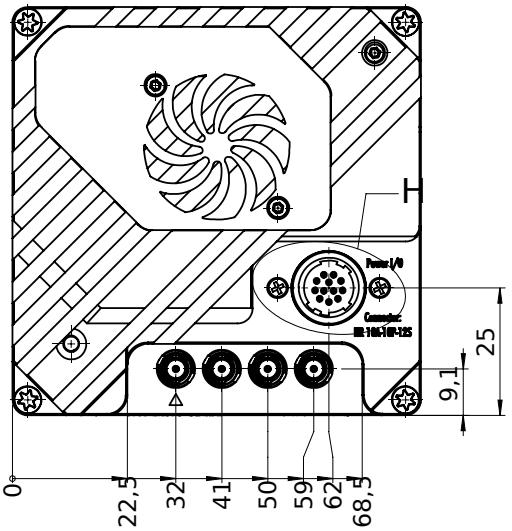

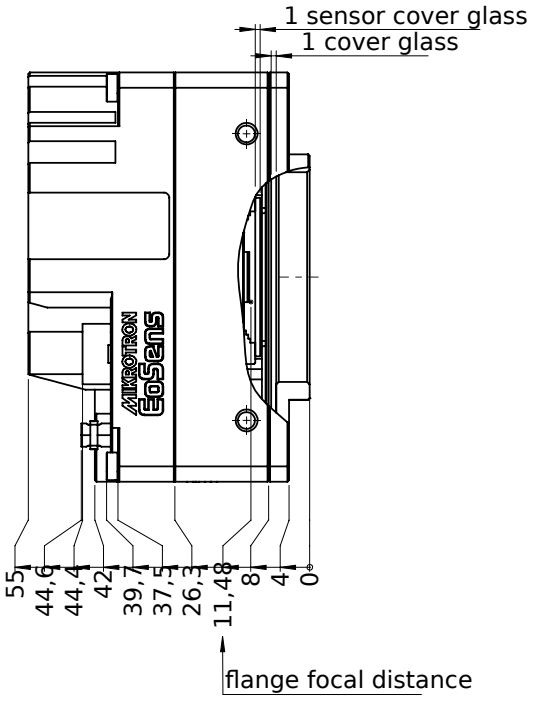

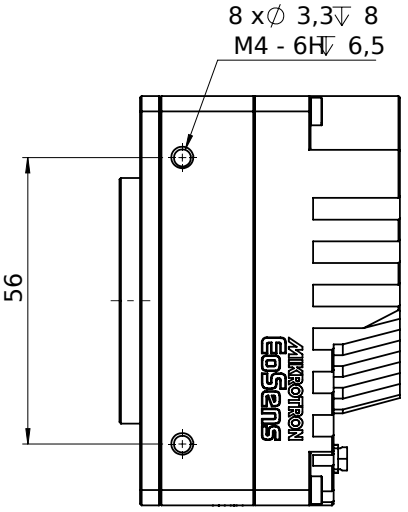

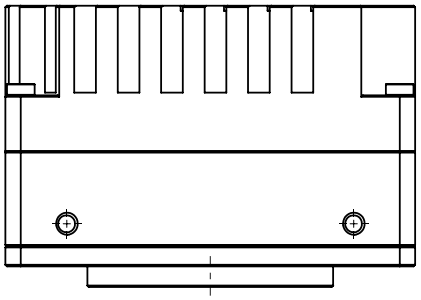

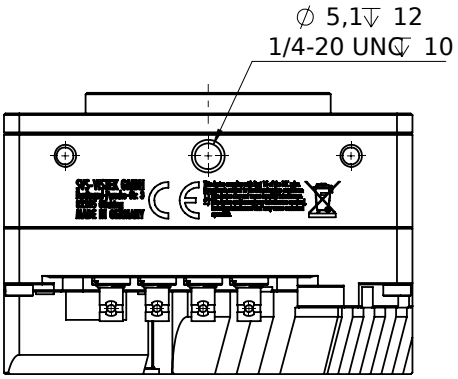

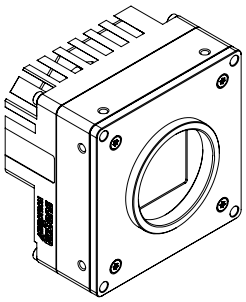

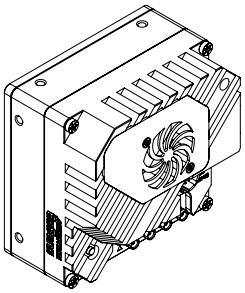

I/O pin assignment

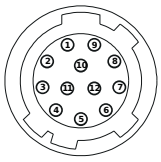

Pin	Signal	Pin	Signal
1 + 12	GND	6	IN0
2 + 11	VCC (12- 24V)	7	IO_{GND}
3	IO_{GND}	8	OUT1
4	OUT0	9	IO_{GND}
5	IO_{GND}	10	IN1