

EoSens CoaXPress-12

EoSens9.5MCX12-M58

□□	
□□□	EoSens9.5MCX12-M58
□□□□□	F006223
□□□□□□	EoSens CoaXPress-12
□□□□□	Available

□□□□	
□□□□□□□	Area scan
□□□	Mono
□□□□□	Visible
□□□□□□□	380 nm to 1000 nm
□□□	4,096 × 2,304 (9.50 MP)
□□□□□□□	Luxima LUX9506
□□□□□□□□□□	cmos
□□□□□□□□	Global shutter (GS)
□□□□□□□	26.62 × 14.98 mm (30.55 mm, Type 2)
□□□□□□□	6.50 µm × 6.50 µm

□□□□□□□□□□	
□□□□□□□□□	8-bit, 10-bit, 12-bit
□□□□□□□□□□□□□□□	mono8, mono10, mono12

□□□□□□□□□	
□□□□□□□□□	503 fps
□□□□□□□□□ ROI□□□	4096 x 2304 | 503 fps, 1920 x 1080 | 2243 fps, 1280 x 720 | 4898 fps, 640 x 480 | 13498 fps, 4096 x 100 | 11039 fps, 512 x 512 | 15767 fps, 512 x 8 | 225000 fps,
□□□□	2 µs to 40.00 ms

□□□□□□□□□□

□□□	0.0 dB to 12.0 dB

I/O□□□

□□□□	1 x LVDS input, 1 x LVDS output, 0 x TTL input, 0 x TTL output, 2 x 24V input, 2 x Open drain output,
□□□□□□□	1 x RS232 input, 1 x RS232 output, 0 x RS422 input, 0 x RS422 output,
□□□□	0 x Optical isolated input, 0 x Optical isolated input,
I/O□□□□	12-pin Hirose HR10A-10P-12S
□□	Power over CoaXPress only
□□□□	21 W (typical)

□□□□

□□□□	-10 °C to 60 °C (□□)

□□□□□

□□□□□L x W x H mm□	57 × 80 × 80
IP□□	IP30
□□□□□□□	M58x0.75
□□	630 g

□□□□□□□□

□□□□□□□□□□□□□	cxp-12 with 4 connections
□□□□□□□□□□□□□	(micro-BNC)
□□□□□□□	CoaXPress 2.0

FW□□ - □□□□

□□□□□	external
□□□□□□	digital, analog
□□□□□□	roi, mirror-image, dpc, shading-correction

FW□□ - □□□□□

□□□□□□□/□□	external, trigger-over-cxp

Quantum Efficiency

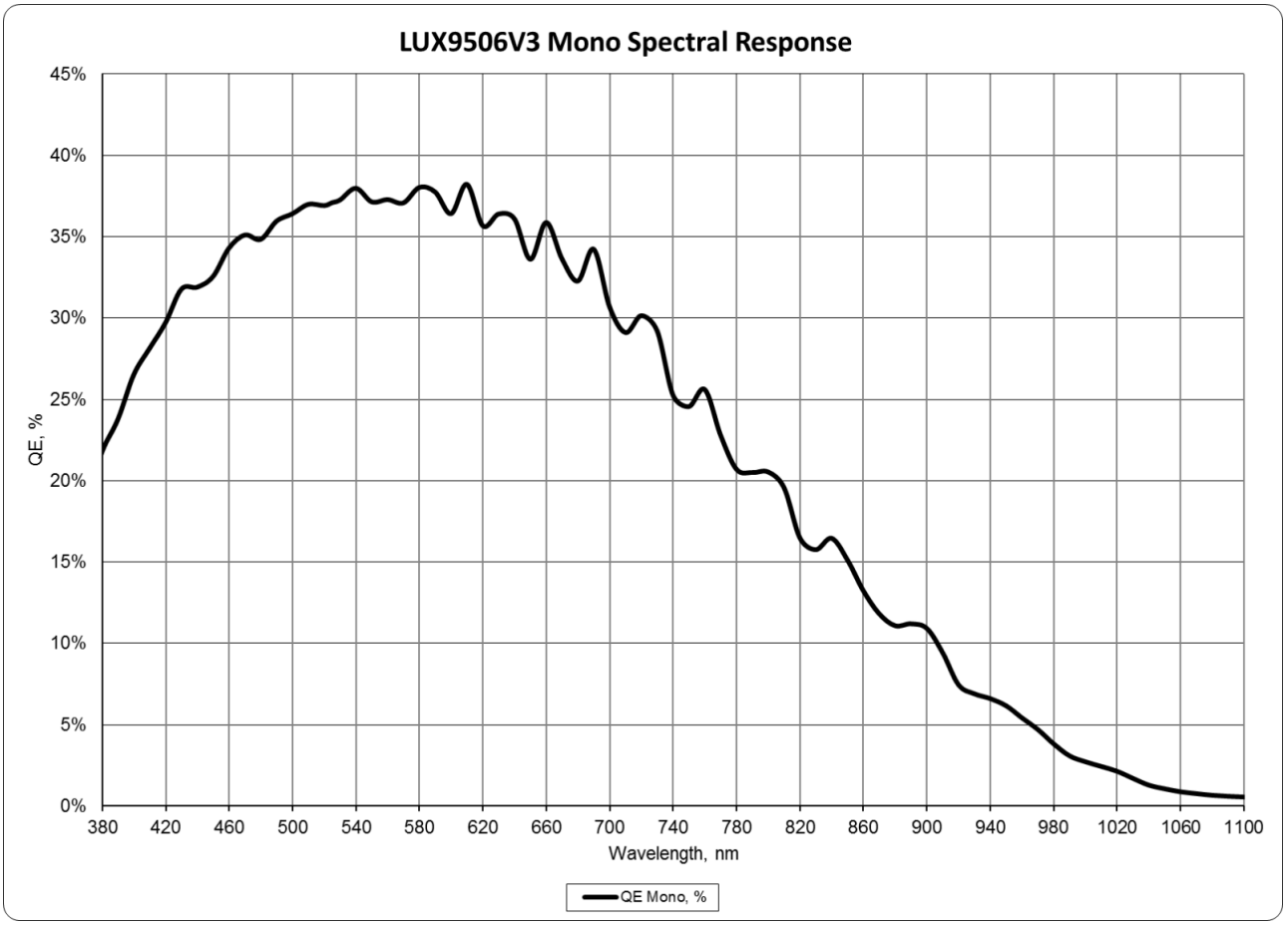

Technical Drawing

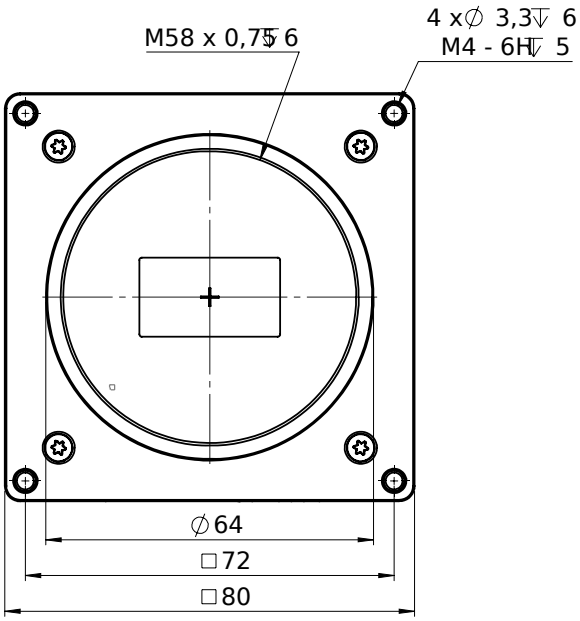

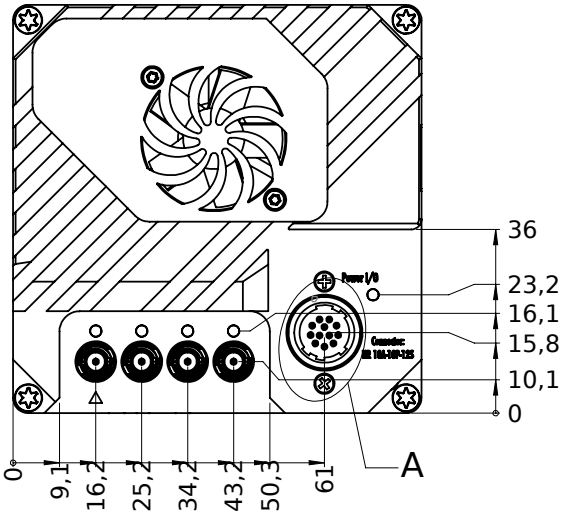

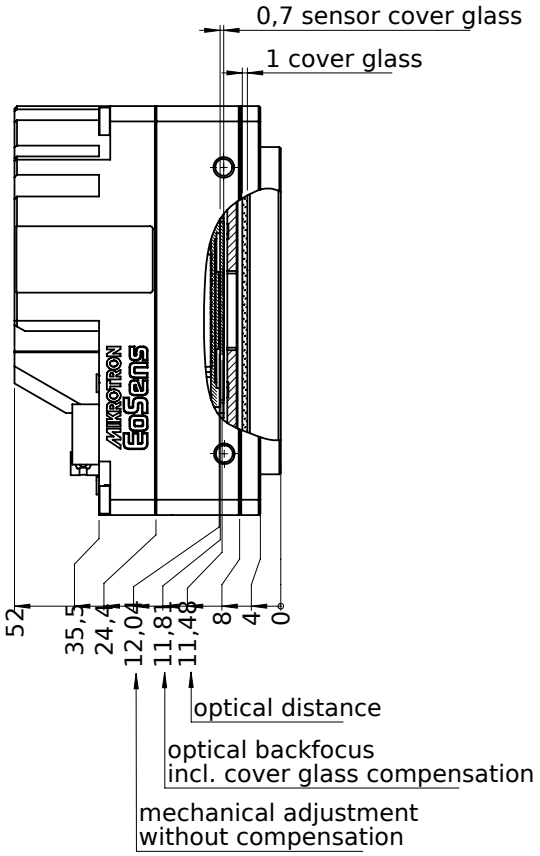
0,7 sensor cover glass
1 cover glass
52
35,5
24,4
12,04
11,81
11,48
8
4
0
optical distance
optical backfocus
incl. cover glass compensation
mechanical adjustment
without compensation

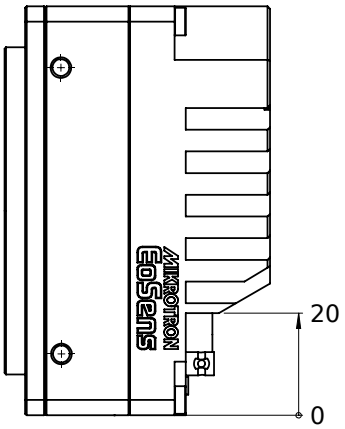
20
0

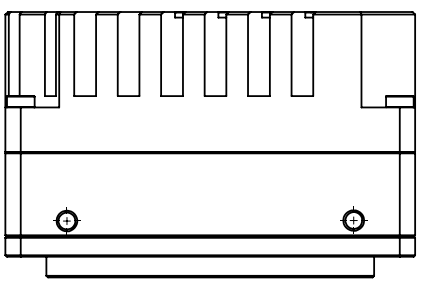

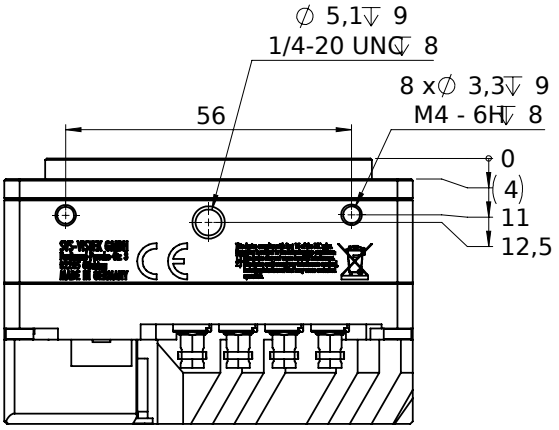
∅ 5,1↧ 9
1/4-20 UNC↧ 8
8 x∅ 3,3↧ 9
M4 - 6H↧ 8
56
0
(4)
11
12,5

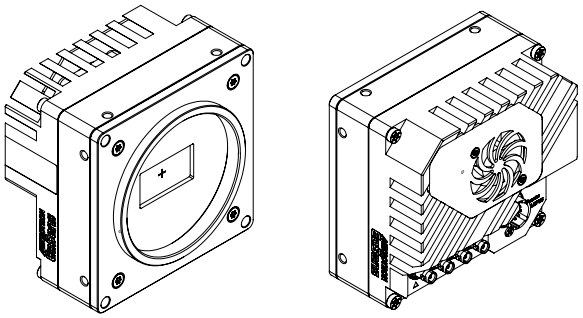

I/O pin assignment

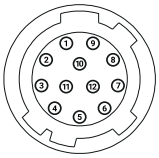

Pin	Signal	Pin	Signal
1	V_{out}- (GND)	7	OUT 1 (open drain)
2	V_{out}+ (24 V)	8	OUT 2 (open drain)
3	IN 4 RxD (RS 232)	9	LVDS Input P
4	OUT 4 TxD (RS 232)	10	LVDS Input N
5	IN 1 (0-24 V)	11	LVDS Output P
6	IN 2 (0-24 V)	12	LVDS Output N