

EoSens CoaXPress-12

EoSens2.0CCX12-CM

□□	
□□□	EoSens2.0CCX12-CM
□□□□□	F006009
□□□□□□	EoSens CoaXPress-12
□□□□□	Available

□□□	
□□□□□□□	Area scan
□□□	Color
□□□□□	Visible
□□□□□□□	400 nm to 1000 nm
□□□	1,920 × 1,080 (2.00 MP)
□□□□□□□	Luxima Lux19HS
□□□□□□□□□□	cmos
□□□□□□□□	Global shutter (GS)
□□□□□□□	19.2 × 10.8 mm (22.03 mm, Type 4/3)
□□□□□□□	10.00 µm × 10.00 µm

□□□□□□□□□□	
□□□□□□□□□	8-bit, 10-bit
RGB□□□□□□□□□□	bayer8, bayer10

□□□□□□□□□	
□□□□□□□□□	2247 fps
□□□□□□□□□ ROI□□□	1920 x 1080 | 2247 fps, 1024 x 768 | 3152 fps, 640 x 480 | 5020 fps, 128 x 128 | 18177 fps, 1920 x 8 | 170578 fps, x | 170575 fps,
□□□□	2 µs to 1 s
□□□	0.0 dB to 18.0 dB

I/O□□□

□□□□	0 x LVDS input, 0 x LVDS output, 0 x TTL input, 0 x TTL output, 2 x 24V input, 0 x Open drain output,
□□□□□□□□	0 x RS232 input, 0 x RS232 output, 0 x RS422 input, 0 x RS422 output,
□□□□	0 x Optical isolated input, 0 x Optical isolated input,
I/O□□□□	12-pin Hirose HR10A-10P-12S
□□	12 to 24VDC, Power over CoaXPress
□□□□	External: 13 W (typical)

□□□□

□□□□	-10 °C to 65 °C (□□)

□□□□□

□□□□□L x W x H mm□	55 × 80 × 80
IP□□	IP30
□□□□□□□□	C-Mount
□□	500 g

□□□□□□□□

□□□□□□□□□□□□□□	cxp-12 with 4 connections
□□□□□□□□□□□□□□	(micro-BNC)
□□□□□□□	CoaXPress 2.0

FW□□ - □□□□

□□□□□□	external
□□□□□□□	digital, analog
□□□□□□□	roi, mirror-image

FW□□ - □□□□□

□□□□□□□□/□□	external, trigger-over-cxp

Technical Drawing

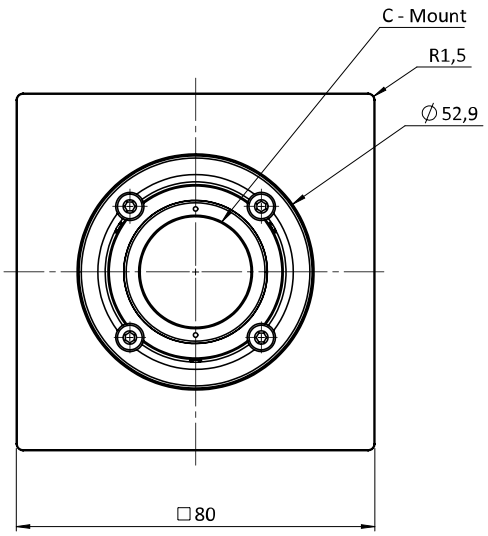

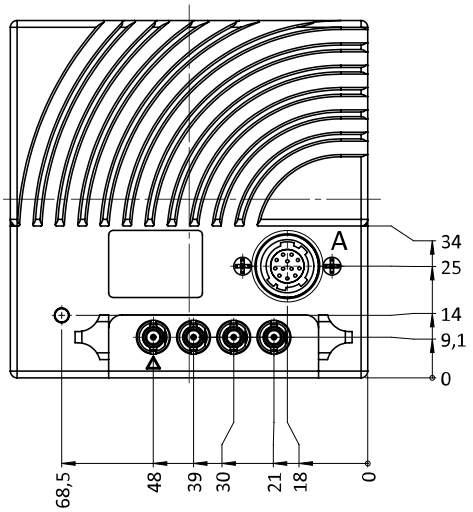

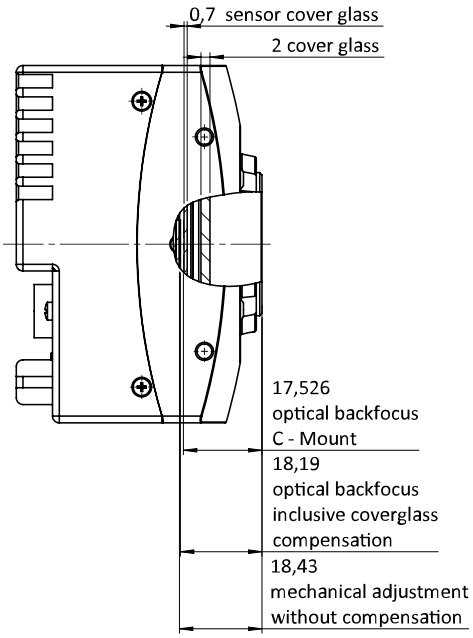

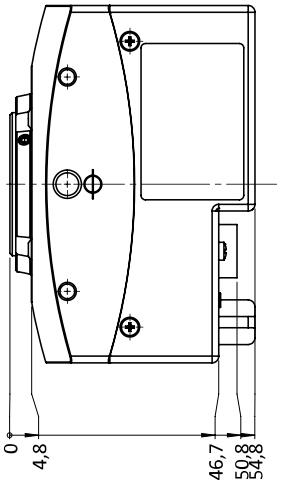

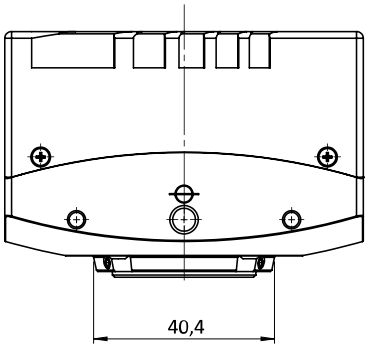

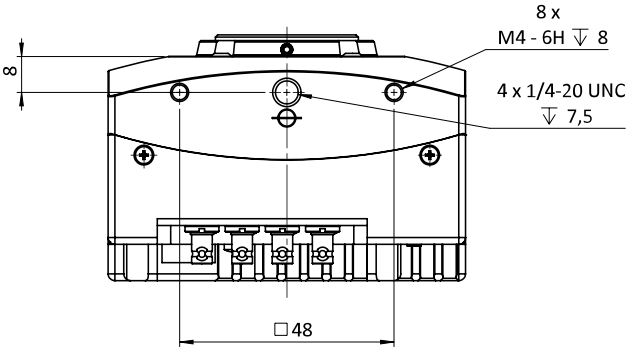

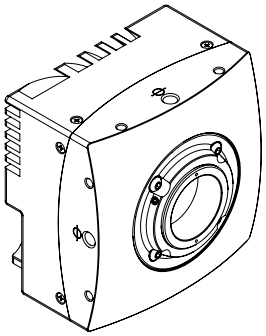

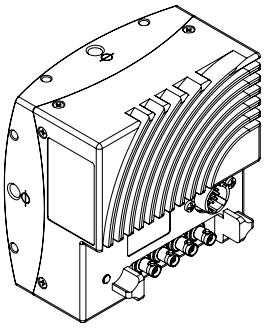

I/O pin assignment

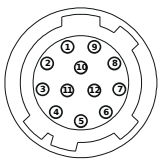

Pin	Signal	Pin	Signal
1 + 12	GND	6	IN0
2 + 11	VCC (12- 24V)	7	IO_{GND}
3	IO_{GND}	8	OUT1
4	OUT0	9	IO_{GND}
5	IO_{GND}	10	IN1