Allied Vision



EoSens CoaXPress-12

EoSens21MCX12-FM

□□	
□□□	EoSens21MCX12-FM
□□□□□	F006011
□□□□□□□	EoSens CoaXPress-12
□□□□□	Available

□□□□	
□□□□□□□□	Area scan
□□□	Mono
□□□□□	Visible
□□□□□□□□	350 nm to 1000 nm
□□□	5,120 × 4,096 (21.00 MP)
□□□□□□□□	Gpixel GSPRINT4521
□□□□□□□□□□□	cmos
□□□□□□□□□	Global shutter (GS)
□□□□□□□□	23.04 × 18.43 mm (29.51 mm, Type APS-C)
□□□□□□□□	4.50 µm × 4.50 µm

□□□□□□□□□□	
□□□□□□□□□□	8-bit, 10-bit, 12-bit
□□□□□□□□□□□□□□□□	mono8, mono10, mono12

□□□□□□□□□	
□□□□□□□□□□	230 fps
□□□□□□□□□□ ROI□□□	5120 x 4096 | 230 fps, 5120 x 3072 | 305 fps, 5120 x 1024 | 891 fps, 5120 x 128 | 5540 fps, x | 12560 fps,
□□□□	4 µs to 1 s
□□□	0.0 dB to 12.0 dB

I/O□□□

□□□□	0 x LVDS input, 0 x LVDS output, 0 x TTL input, 0 x TTL output, 2 x 24V input, 0 x Open drain output,
□□□□□□□□	0 x RS232 input, 0 x RS232 output, 0 x RS422 input, 0 x RS422 output,
□□□□	0 x Optical isolated input, 0 x Optical isolated input,
I/O□□□□	12-pin Hirose HR10A-10P-12S
□□	12 to 24VDC
□□□□	External: 21 W (typical)

□□□□

□□□□	-10 °C to 45 °C (□□□□□□□□□□)

□□□□□

□□□□□L x W x H mm□	93 × 80 × 80
IP□□	IP30
□□□□□□□□	F-Mount
□□	630 g

□□□□□□□□

□□□□□□□□□□□□□□	cxp-12 with 4 connections
□□□□□□□□□□□□□□	(micro-BNC)
□□□□□□□	CoaXPress 2.0

FW□□ - □□□□

□□□□□□	external
□□□□□□□	digital, analog
□□□□□□□□□□□□	true
□□□□□□□	roi, mirror-image

Quantum Efficiency

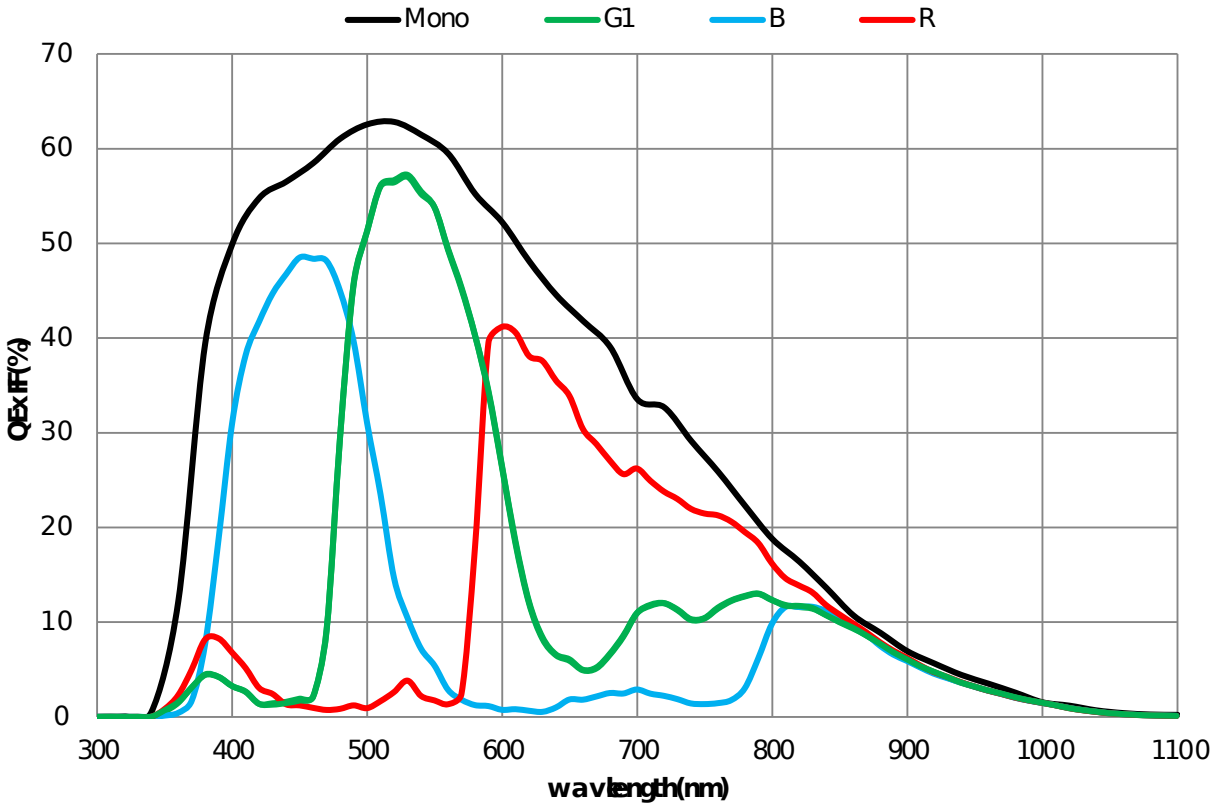

Allied Vision

Technical Drawing

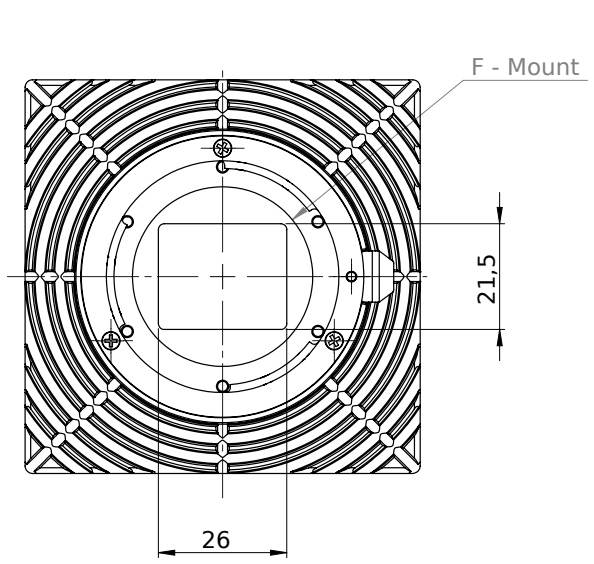

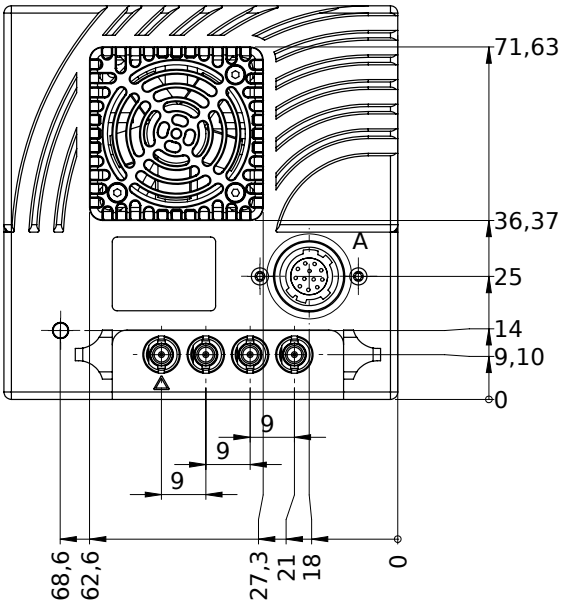

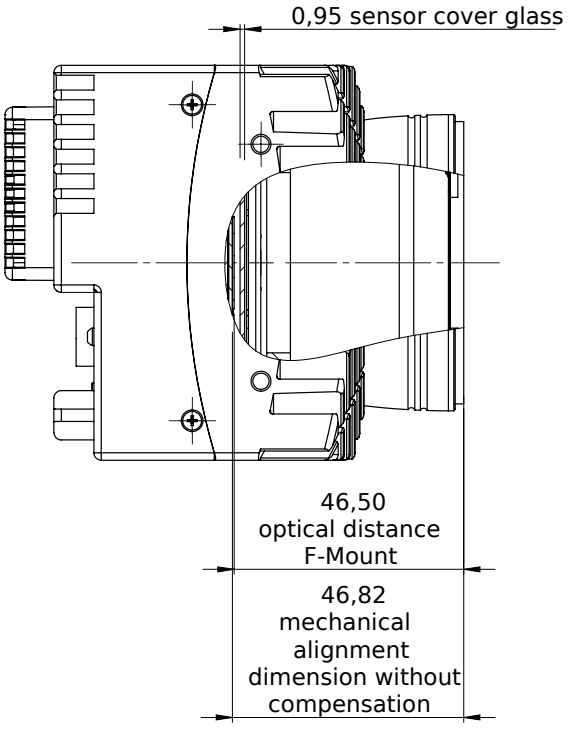

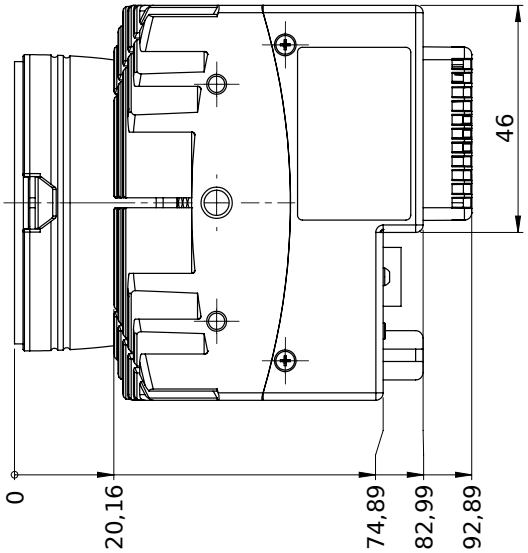

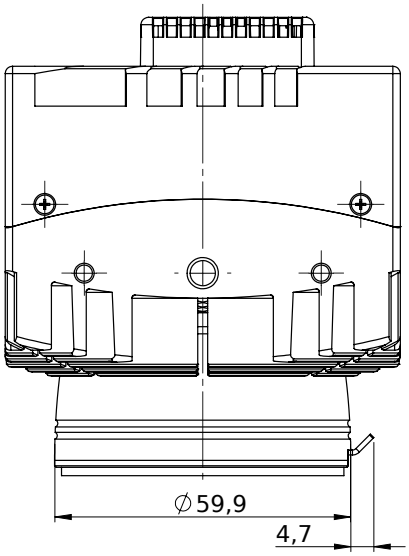

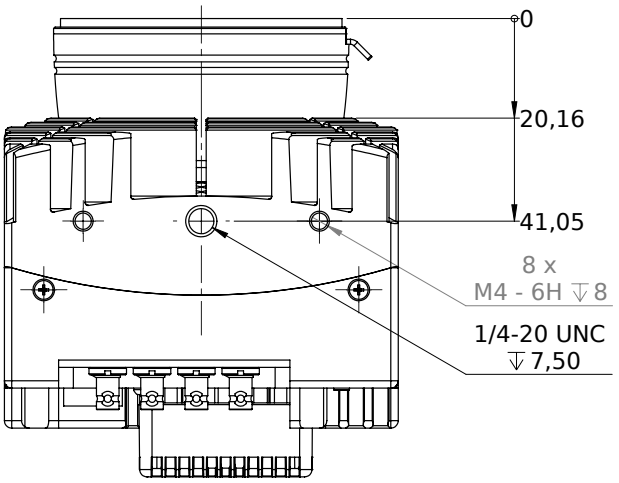

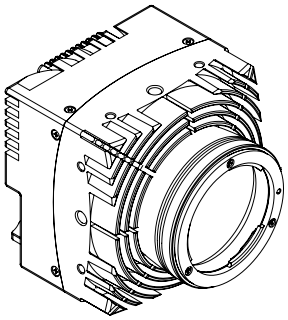

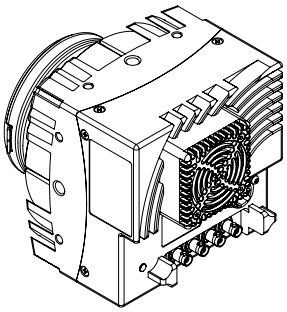

I/O pin assignment

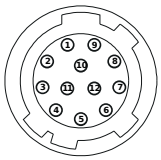

Pin	Signal	Pin	Signal
1 + 12	GND	6	IN0
2 + 11	VCC (12- 24V)	7	IO_{GND}
3	IO_{GND}	8	OUT1
4	OUT0	9	IO_{GND}
5	IO_{GND}	10	IN1