Allied Vision

Prosilica GX

3300

- 240 MB/s with dual port LAG technology
- 3-axis motorized lens control
- 17 fps @ full resolution
- Various lens mount options

Description

8.1 Megapixel CCD camera with high frame rate - Dual port Gigabit Ethernet output

Prosilica#GX3300/GX3300C is a very high#resolution CCD camera with Gigabit Ethernet output. This camera has a fast frame rate of 17#frames per second#at full resolution. It uses the high-quality 8#Megapixel ON Semiconductor KAI-08050#CCD sensor that provides superior image quality, excellent sensitivity, and low noise. This camera has two screw-captivated Gigabit Ethernet ports configured as a Link Aggregation Group (LAG) to provide a sustained maximum data rate of 240 MB per second. It can also work at half the bandwidth (120 MB/s) using a single cable.
Options:

- Canon EF-Mount (Factory conversion via RS232 I/O)
- Optical filters (IR cut filter/Protection glass)
- Sensor variant: Class 2, taped cover glass with microlens
- Sensor variant: Class 2, taped cover glass without microlens

See the#Modular Concept#for lens mount, optical filters, and sensor options.

Specifications

Prosilica GX	**3300**
Interface	IEEE 802.3 1000baseT
Resolution	3296 (H) × 2472 (V)
Sensor	OnSemi KAI-08050
Sensor type	CCD Progressive
Cell size	5.5 µm x 5.5 µm
Lens mount	F-Mount
Max frame rate at full resolution	17 fps

Prosilica GX	3300
ADC	14 bit
Image buffer (RAM)	128 MByte
Output	
Bit depth	14 (monochrome); 12 (color) bit
Mono modes	Mono8, Mono12, Mono12Packed, Mono14
Color modes RGB	RGB8Packed, BGR8Packed, RGBA8Packed, BGRA8Packed, RGB12Packed
Raw modes	BayerGR8, BayerGR12, BayerGR12Packed
General purpose inputs/outputs (GPIOs)	
Opto-isolated I/Os	2 inputs, 4 outputs
RS-232	1
Operating conditions/dimensions	
Operating temperature	0 °C to +50 °C ambient (without condensation)
Power requirements (DC)	5 to 24 VDC
Power consumption (@12 V)	6.1 W (1 port); 7.2 W (2 ports)
Mass	365 g
Body dimensions (L × W × H in mm)	136.3 × 53.3 × 33 (including connectors)
Regulations	CE, RoHS, REACH, WEEE, FCC, ICES

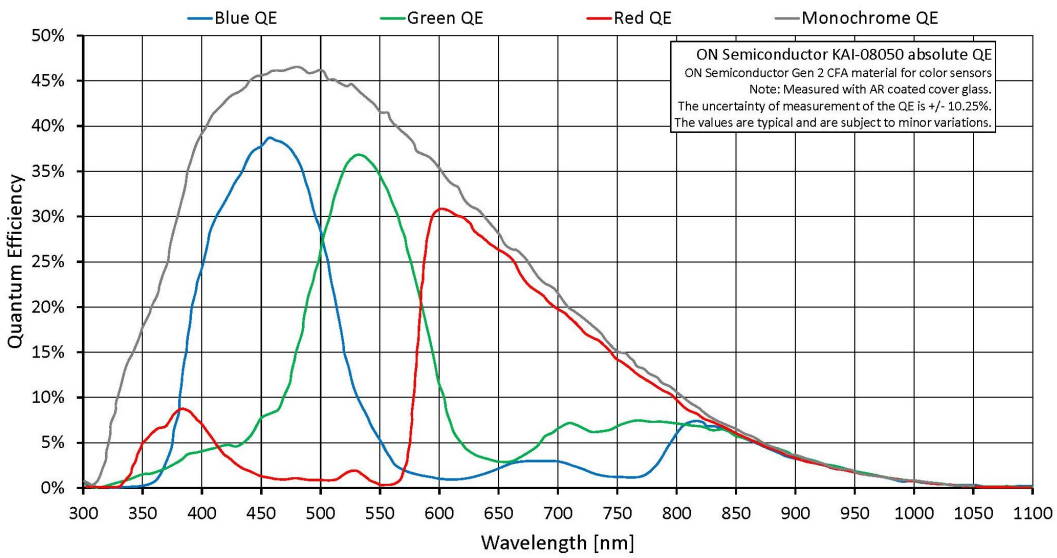

Features

Prosilica#GX3300/GX3300C features include:

- 3-axis motorized lens control
- Video-type auto iris
- Region of interest (ROI), DSP subregion (selectable ROI for auto features)
- Binning
- Auto gain (manual gain control: 0 to 34 dB)
- Auto exposure (manual exposure controls: 10 #s to 26.8 s)
- Auto white balance
- StreamBytesPerSecond (easy bandwidth control)
- Stream hold
- Sync out modes: Trigger ready, input, exposing, readout, imaging, strobe, GPO
- Global shutter (digital shutter)
- Recorder and Multiframe acquisition modes
- Event channel
- Chunk data
- Storable user sets

Allied Vision

Technical drawing

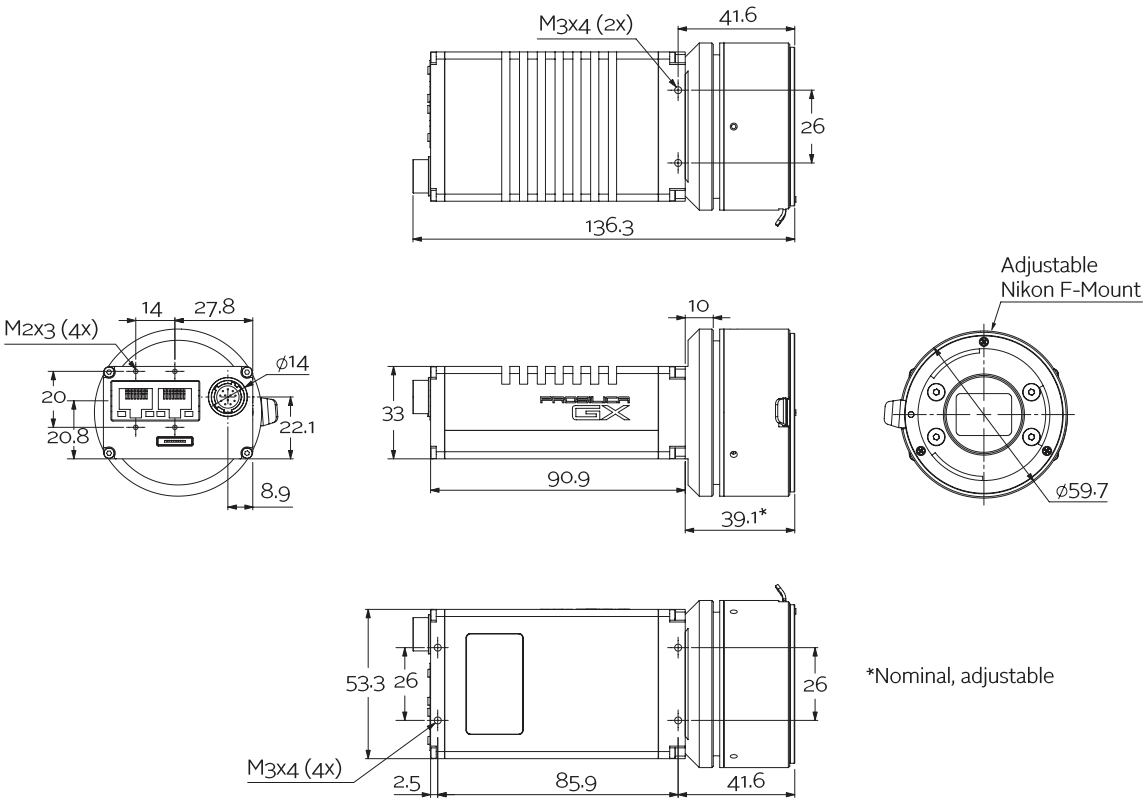

*Nominal, adjustable

Applications

Prosilica GX3300/GX3300C is ideal for a wide range of applications including:

- LCD panel inspection
- High-resolution industrial inspection
- 3D metrology, general machine vision
- Public security
- Military surveillance
- Traffic imaging (Intelligent Traffic Systems)
- Embedded systems
- OEM applications