Allied Vision

Prosilica GT

2050 NIR

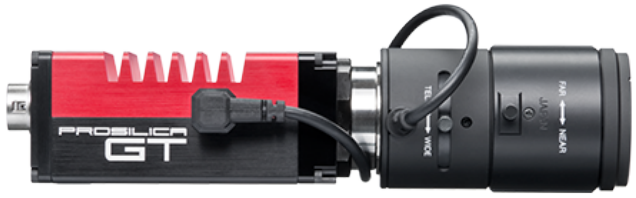

- Versatile temperature range for extreme environments
- IEEE 1588 PTP
- PoE
- P-Iris and DC-Iris lens control

Description

4.2 Megapixel CMOS NIR enhanced camera for extreme environments - fast frame rates

Prosilica GT2050NIR is a 4.2 Megapixel camera equipped with a NIR optimized variant of the high quality CMOSIS CMV4000 sensor. At 900 nm this sensor offers double the quantum efficiency, an increase from 8% to 16% absolute. Prosilica GT2050NIR is a rugged camera designed to operate in extreme environments and fluctuating lighting conditions. It offers Precise iris lens control allowing users to fix the aperture size to optimize depth of field, exposure and gain without the need for additional control elements.#By default NIR models ship with no protection glass.
Options:

- Various lens mounts
- Various optical filters

See the Modular Concept for lens mount and optical filter options.

Specifications

Prosilica GT	2050 NIR
Interface	IEEE 802.3 1000BASE-T, IEEE 802.3af (PoE)
Resolution	2048 (H) × 2048 (V)
Sensor	CMOSIS CMV4000 NIR
Sensor type	CMOS
Cell size	5.5 µm x 5.5 µm
Lens mount	C-Mount
Max frame rate at full resolution	28.6 fps
ADC	12 bit
Image buffer (RAM)	128 MByte

Prosilica GT	2050 NIR
Output	
Bit depth	8/12 bit
Mono modes	Mono8, Mono12, Mono12Packed
General purpose inputs/outputs (GPIOs)	
TTL I/Os	1 input, 2 outputs
Opto-isolated I/Os	1 input, 2 outputs
RS-232	1
Operating conditions/dimensions	
Operating temperature	-20 °C to +65 °C ambient (without condensation)
Power requirements (DC)	7 to 25 VDC; PoE
Power consumption (@12 V)	3.5 W @ 12 VDC; 4.3 W PoE
Mass	210 g
Body dimensions (L × W × H in mm)	86 × 53.3 × 33 (including connectors)
Regulations	CE, RoHS, REACH, WEEE, FCC, ICES

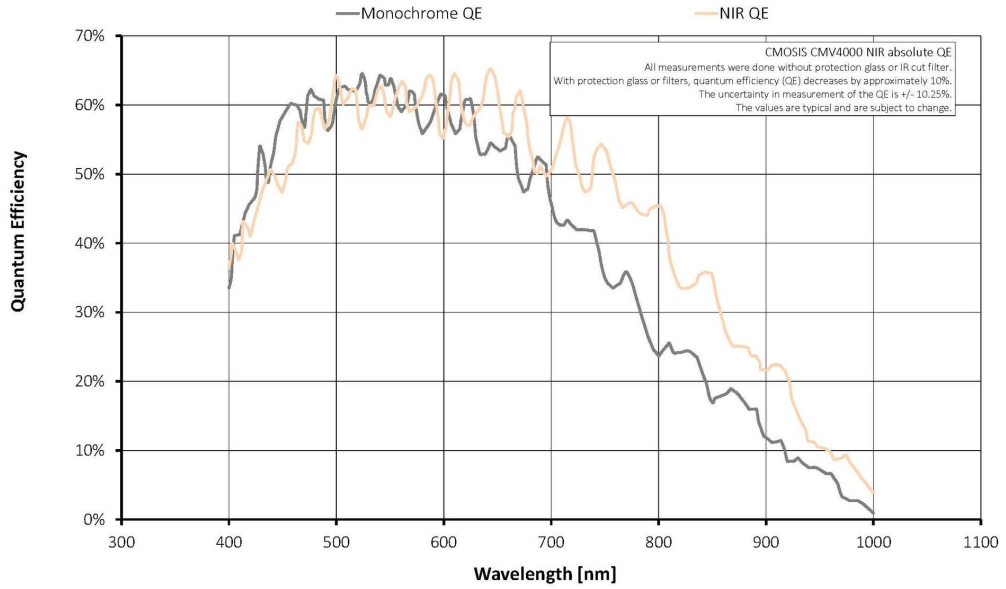

Features

Image optimization features:

- Auto gain (manual gain control: 0 to 26 dB)
- Auto exposure (manual exposure control: 34 #s to 126.2 s)
- BlackLevel (offset)
- Gamma correction

- Look-up tables (LUTs)
- Piecewise Linear HDR mode
- Region of interest (ROI), separate ROI for auto features

Camera control features:

- P-Iris and DC-Iris lens control
- Event channel
- Image chunk data
- IEEE 1588 Precision Time Protocol (PTP)
- RS232
- Storable user sets
- StreamBytesPerSecond (easy bandwidth control)
- StreamHoldSync out modes: Trigger ready, input, exposing, readout, imaging, strobe, GPO
- Temperature monitoring (main board only)
- Trigger over Ethernet (ToE) Action Commands

Allied Vision

Technical drawing

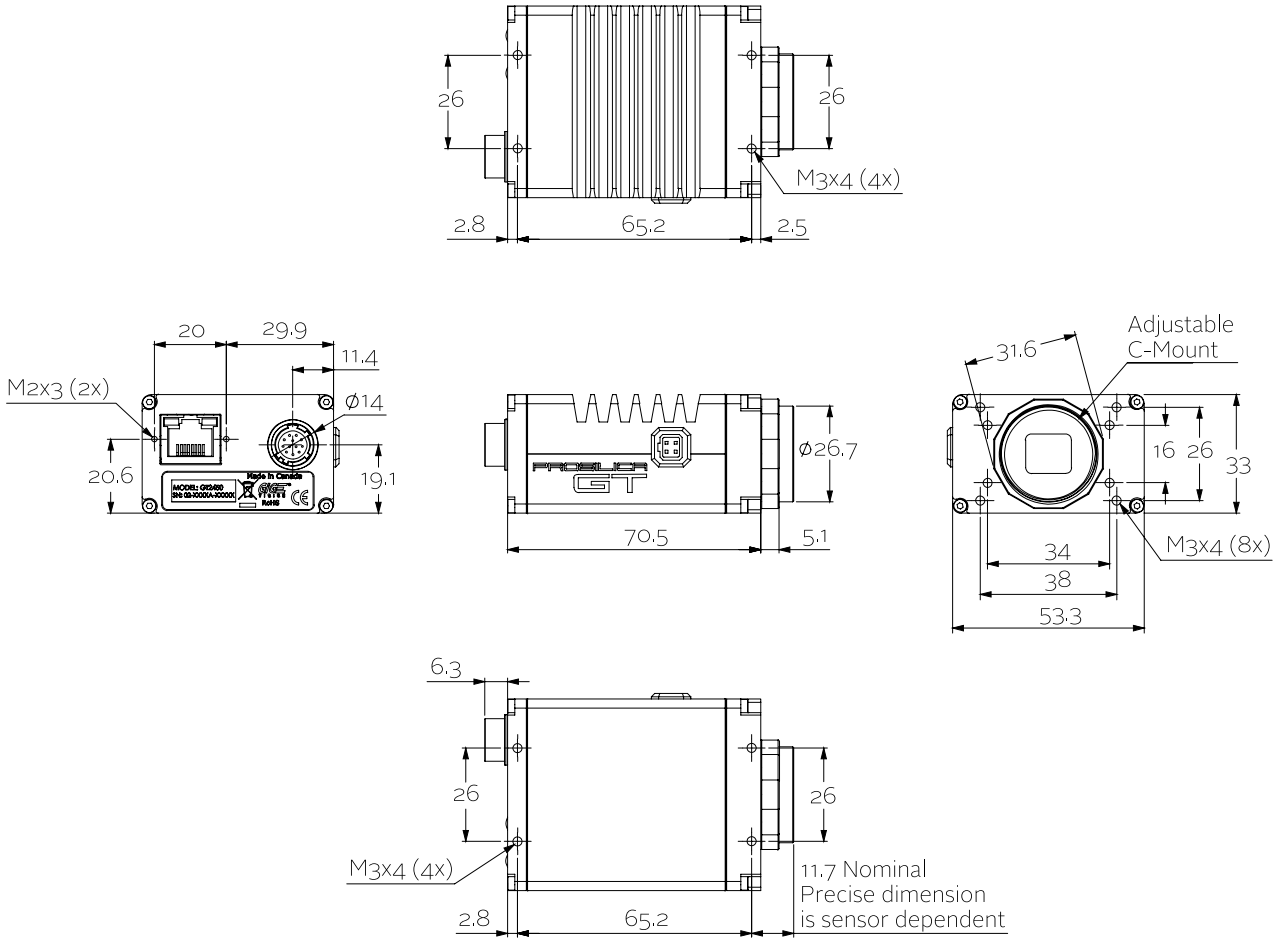

Applications

Prosilica GT2050NIR is ideal for a wide range of applications including:

- Outdoor imaging
- Traffic imaging / Intelligent Traffic Systems (ITS)
- Public security and surveillance
- Industrial inspection
- Machine vision
- Microscopy
- Medical and healthcare