Allied Vision

FireWire

Guppy PRO

F-201

- Compact 2 MP camera
- Robust metal housing
- Sony ICX274
- Optocoupled I/Os

Description

2 Megapixel camera, Sony ICX274, attractive price

The Guppy PRO F-201B/F-201C is a 2 Megapixel IEEE 1394b camera with a robust metal housing and Sony's ICX274 sensor. At full resolution, it runs 14 frames per second.
Options

- Various IR cut/pass filters
- White medical housing

Specifications

Guppy PRO	F-201
Interface	IEEE 1394b - 800 Mb/s, 1 port
Resolution	1624 (H) × 1234 (V)
Sensor	Sony ICX274
Sensor type	CCD Progressive
Cell size	4.4 µm x 4.4 µm
Lens mount	C-Mount
Max frame rate at full resolution	14 fps
ADC	12 bit
Image buffer (RAM)	
Output	
Bit depth	8-12 bit
Mono modes	8/12/16
Color modes RGB	RGB8
Raw modes	8/12/16

Guppy PRO	F-201
General purpose inputs/outputs (GPIOs)	
Opto-isolated I/Os	1/3
Operating conditions/dimensions	
Operating temperature	+5 °C to +45 °C
Power requirements (DC)	8 V to 36 V
Power consumption (@12 V)	<3.5 W
Mass	80 g
Body dimensions (L × W × H in mm)	44.8 × 29 × 29 (including connectors)
Regulations	CE, RoHS, REACH, WEEE, FCC

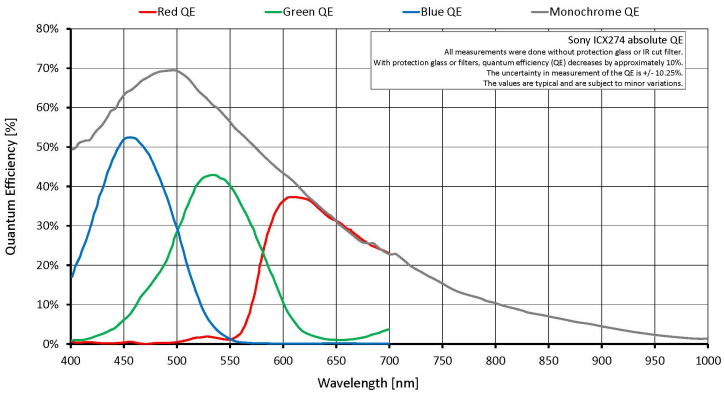

Features

- Look-up table (LUT)
- Gamma correction
- Color correction
- Area of interest (AOI), separate AOI for auto features
- Binning
- Sub-sampling
- Auto gain (manual gain control: 0 to 24.4 dB)
- Auto exposure (55 µs to 67 s)
- Trigger programmable, level, single, bulk, programmable delay
- Storable user sets

Allied Vision

Technical drawing

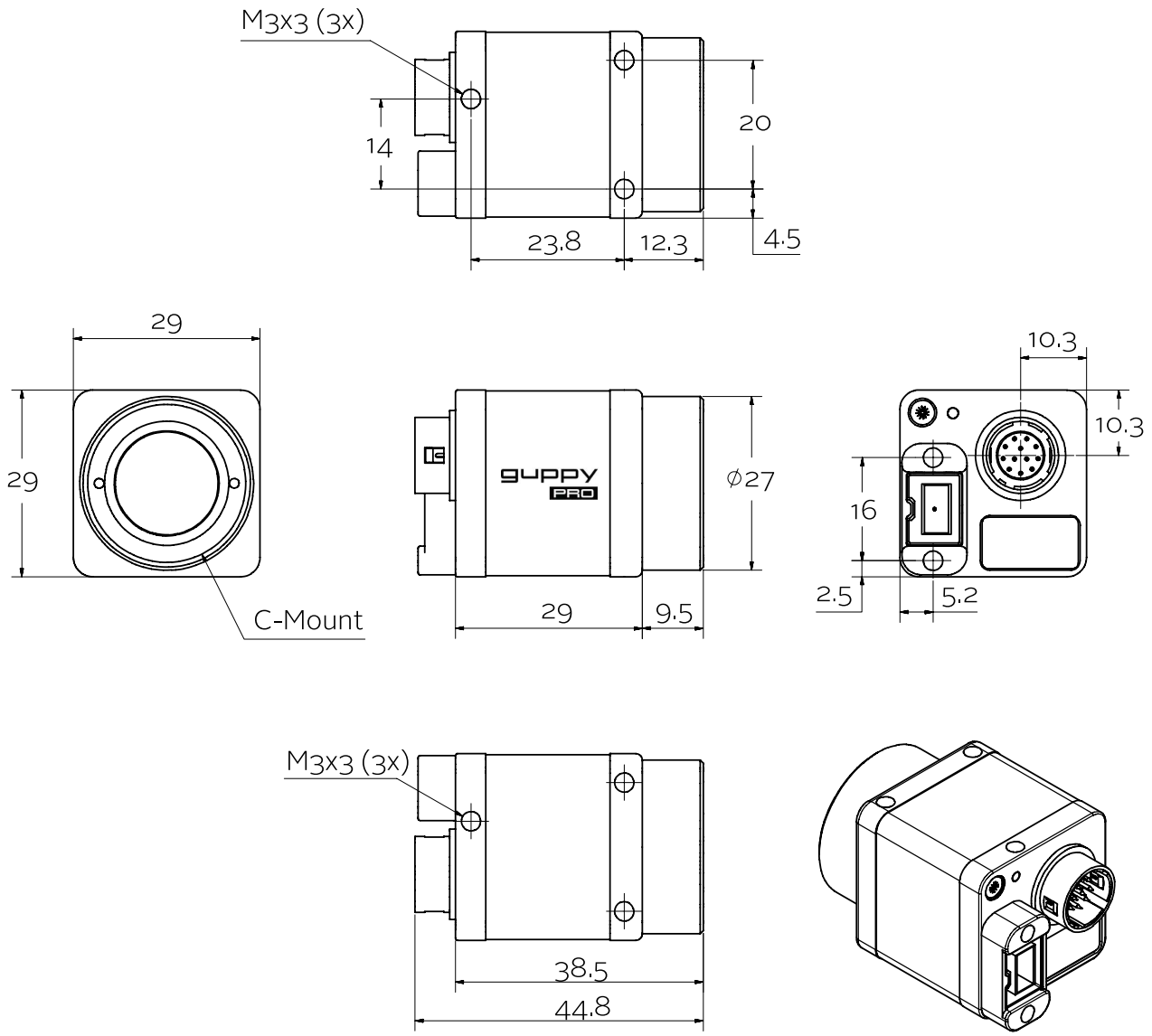

Applications

The Guppy PRO F-201B/F-201C suits particularly well for applications with space constraints. Besides this, it has an excellent price/performance ratio.
Typical applications:

- Machine vision
- Robotics
- Logistics
- Pharmaceutical industry
- Multimedia
- ITS/traffic monitoring