Allied Vision



SHR 10GigE

shr461MXGE

General

Model	shr461MXGE
Product code	F004109
Product series	SHR 10GigE
Status	Discontinued

Sensor

Sensor type	Area scan
Chroma	Mono
Spectrum	Visible
Spectral range	400 nm to 1000 nm
Resolution	11,648 × 8,742 (101.80 MP)
Sensor model	Sony IMX461
Sensor architecture (material)	cmos
Shutter type(s)	Rolling shutter (RS)
Sensor size	43.8 × 32.87 mm (54.76 mm, Type 3.4)
Pixel size	3.76 µm × 3.76 µm

Pixel formats

Sensor bit depth	8-bit, 12-bit, 16-bit
Monochrome pixel formats	mono8, mono12, mono16

Imaging performance

Dynamic range	81.3 dB
SNR	46.8 dB

Timing and gain

Max. frame rate	8.7 fps
Exposure time	60 µs to 60 s
Gain	0.0 dB to 36.0 dB

I/Os and power

Non-isolated lines	0 x LVDS input, 0 x LVDS output, 0 x TTL input, 0 x TTL output, 2 x 24V input, 4 x Open drain output,
Specific non-isolated lines	1 x RS232 input, 1 x RS232 output, 0 x RS422 input, 0 x RS422 output,
Opto-isolated lines	1 x Optical isolated input, 0 x Optical isolated input,
I/O connector	12-pin Hirose HR10A-10P-12S
Power supply	10 to 25VDC, Power over Ethernet (POE+, in option -P)
Power consumption	External: 17 W (typical)

Operating conditions

Operating temperature	-10 °C to 45 °C (ambient, without condensation)

Mechanical properties

Body dimensions (L x W x H in mm)	83 × 80 × 80
Filter/protection glass	Borofloat B270i - AR coating
IP class	IP30
Lens mount(s)	M72x0.75
Weight	580 g

Interfaces

Digital interface	10gige
Interface connector	(RJ-45)
Vision standard	GigE Vision 2.0

FW features - image control

Exposure modes	manual, auto, external
Gain modes	auto, manual
Image control features	lut, mirror-image, dpc, shading-correction, ffc

FW features - camera control

Trigger modes/sync	internal, software, external
Camera control features	User Sets, POE, PWM(4), Sequencer,

Quantum Efficiency

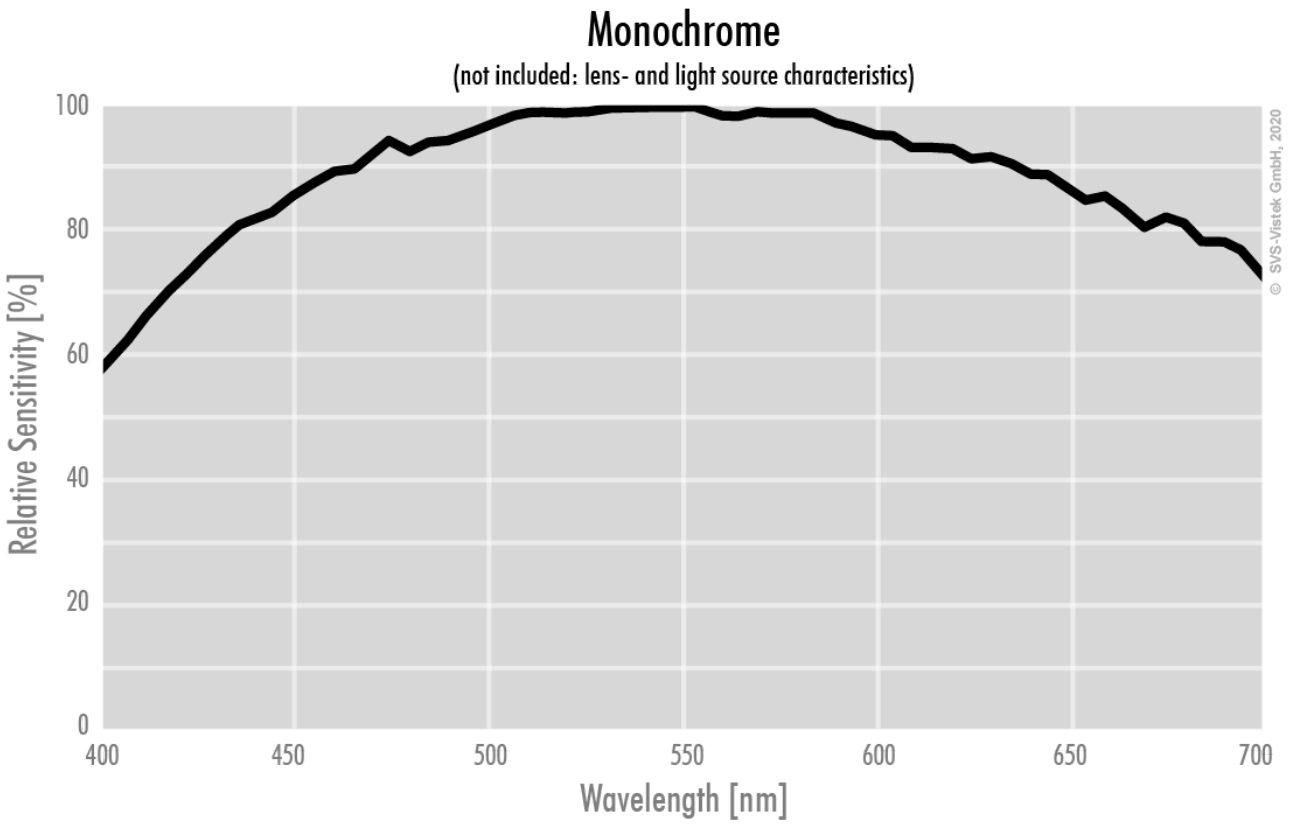

Allied Vision

Technical Drawing

front

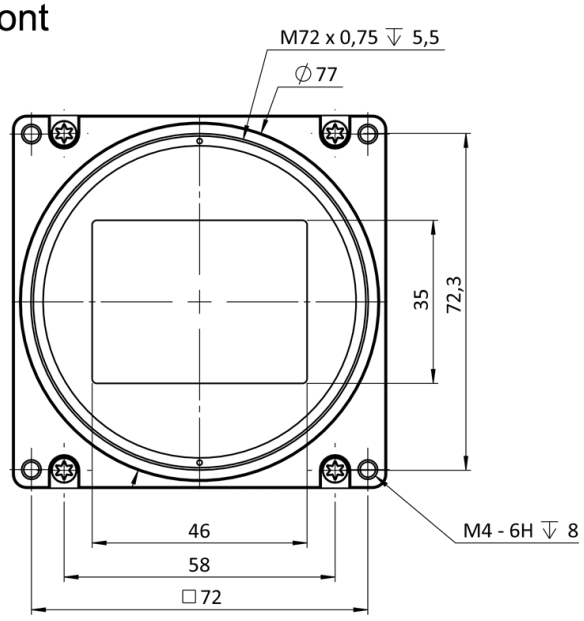

back

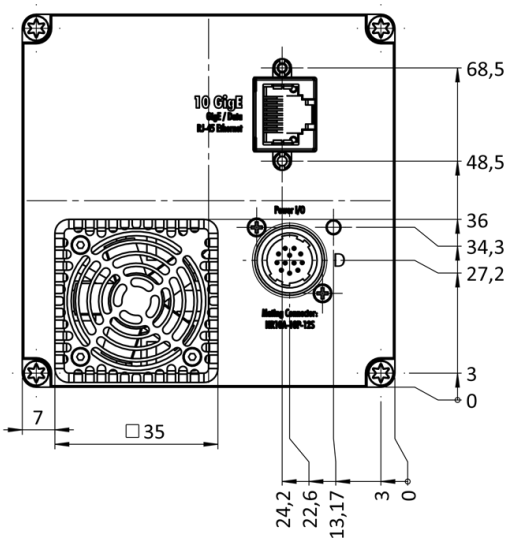

cross section

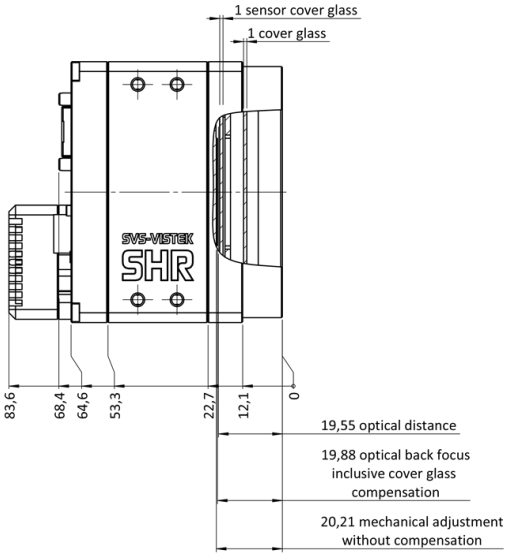

right side

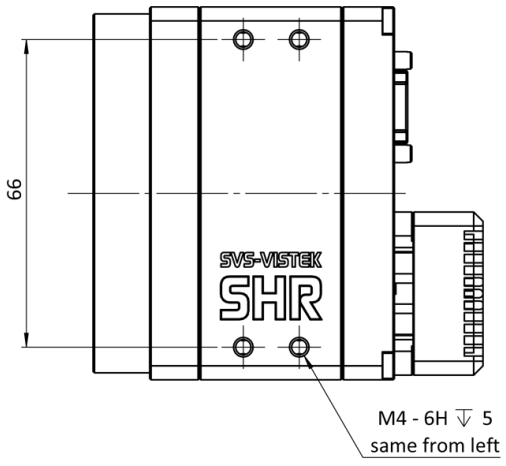

top

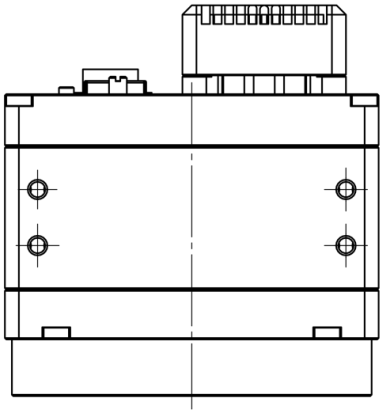

bottom

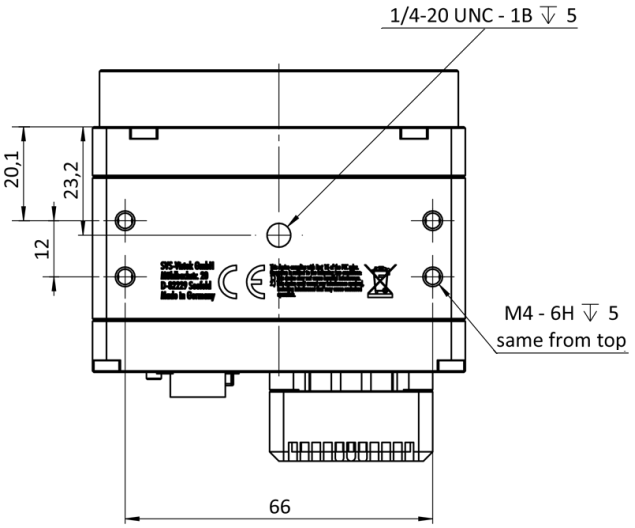

3D

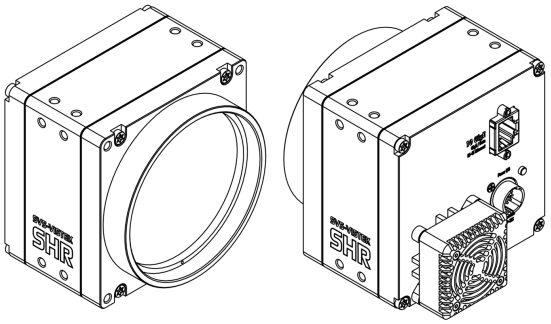

I/O pin assignment

Hirose 12 Pin

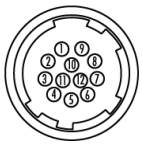

1	VIN –	(GND)	7	OUT 1	(open drain)
2	VIN +	(10 V to 25 V DC)	8	OUT 2	(open drain)
3	IN 4	(RXD RS232)	9	IN 3 +	(opto In +)
4	OUT 4	(TXD RS232)	10	IN 3 –	(opto In –)
5	IN 1	(0 - 24V)	11	OUT 3	(open drain)
6	IN 2	(0 - 24V)	12	OUT 0	(open drain)