Allied Vision



HR CoaXPress

hr65MCX

General

Model	hr65MCX
Product code	F004137
Product series	HR CoaXPress
Status	Available

Sensor

Sensor type	Area scan
Chroma	Mono
Spectrum	Visible
Spectral range	400 nm to 1000 nm
Resolution	9,344 × 7,000 (65.00 MP)
Sensor model	Gpixel GMAX3265
Sensor architecture (material)	cmos
Shutter type(s)	Global shutter (GS)
Sensor size	29.9 × 22.4 mm (37.36 mm, Type 2.3)
Pixel size	3.20 µm × 3.20 µm

Pixel formats

Sensor bit depth	8-bit, 10-bit
Monochrome pixel formats	mono8, mono10

Imaging performance

Dynamic range	65.6 dB
SNR	40 dB

Allied Vision

Timing and gain

Max. frame rate	35.5 fps
Exposure time	12 µs to 60 s
Gain	0.0 dB to 18.0 dB

I/Os and power

Non-isolated lines	0 x LVDS input, 0 x LVDS output, 0 x TTL input, 0 x TTL output, 2 x 24V input, 4 x Open drain output,
Specific non-isolated lines	1 x RS232 input, 1 x RS232 output, 0 x RS422 input, 0 x RS422 output,
Opto-isolated lines	1 x Optical isolated input, 0 x Optical isolated input,
I/O connector	12-pin Hirose HR10A-10P-12S
Power supply	10 to 25VDC, Power over CoaXPress
Power consumption	External: 10.5 W (typical)

Operating conditions

Operating temperature (housing)	-10 °C to 65 °C

Mechanical properties

Body dimensions (L x W x H in mm)	76 × 70 × 70
Filter/protection glass	N-BK7 - AR coating
IP class	IP30
Lens mount(s)	M58x0.75
Weight	420 g

On-board memory and FPGA

Non-volatile memory (Flash)	160 MByte

Interfaces

Digital interface	cxp-6 with 4 connections
Interface connector	(Din1.0/2.3)
Vision standard	CoaXPress 1.0

FW features - image control

Exposure modes	manual, auto, external
Gain modes	auto, manual

FW features - image control

Image control features	roi, lut, mirror-image, dpc, shading-correction, ffc

FW features - camera control

Trigger modes/sync	internal, software, external
Camera control features	PoCxP, User Sets, PWM(4), Sequencer,

Quantum Efficiency

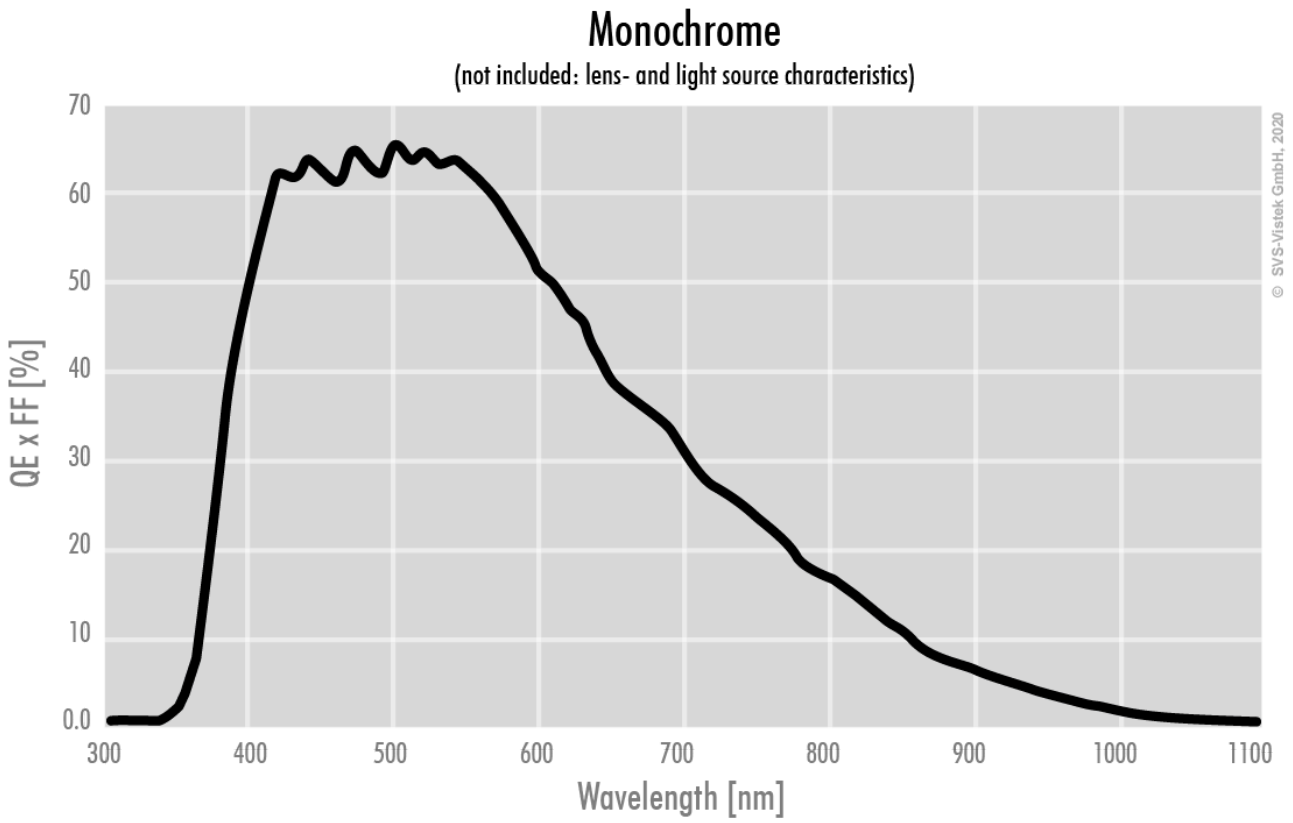

Allied Vision

Technical Drawing

front

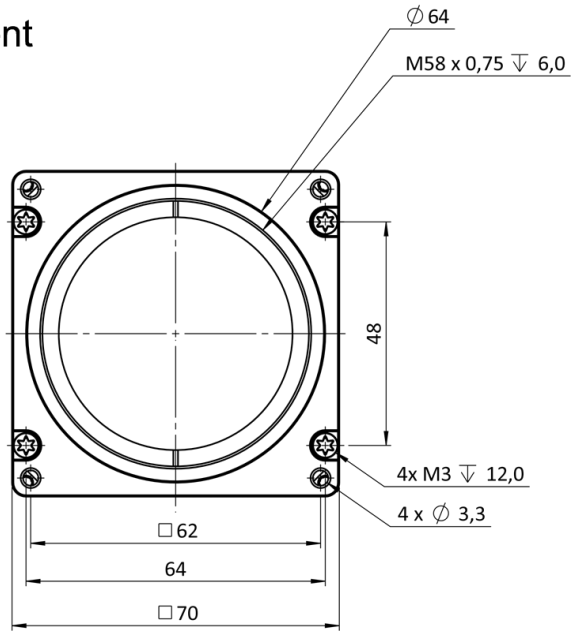

back

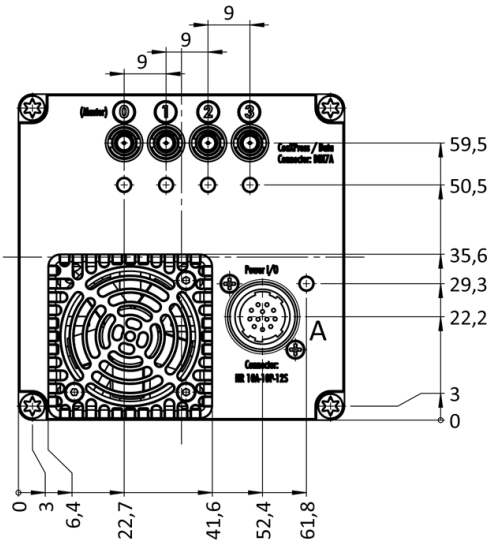

cross section

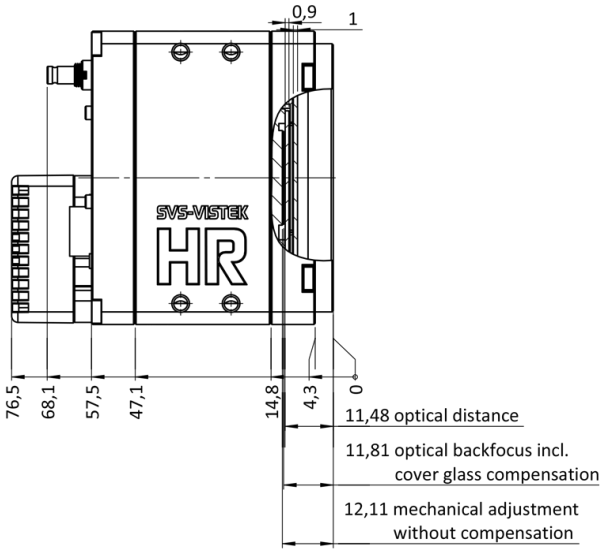

right side

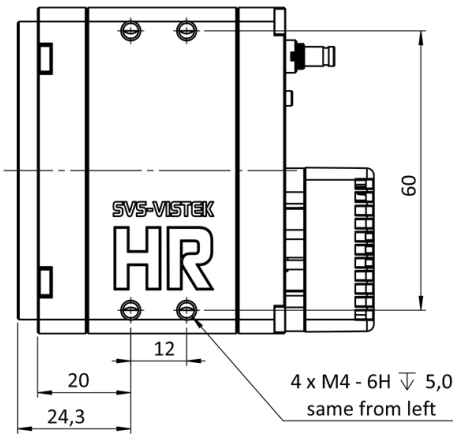

top

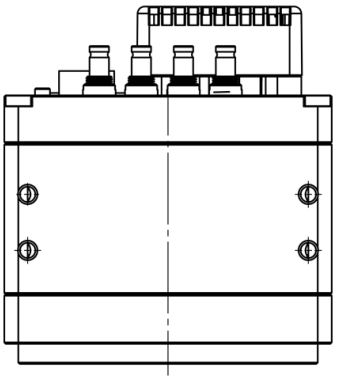

bottom

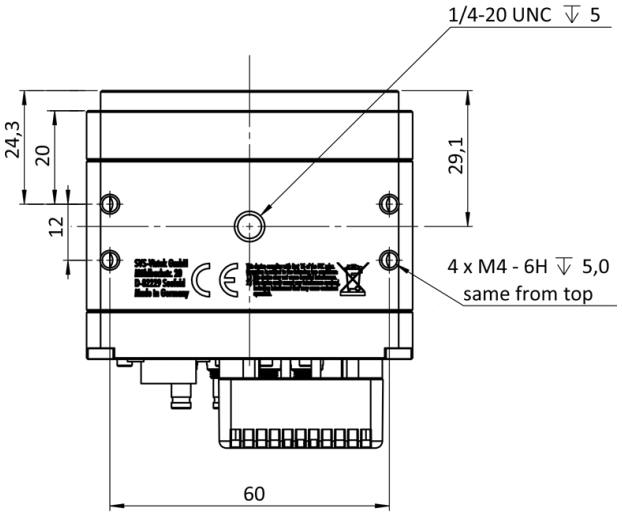

3D

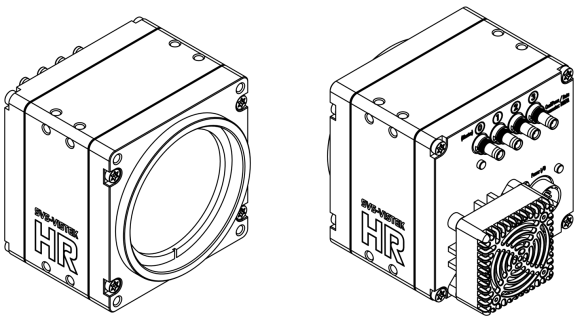

I/O pin assignment

Hirose 12 Pin

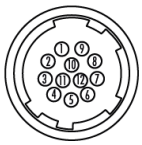

1	VIN –	(GND)	7	OUT 1	(open drain)
2	VIN +	(10 V to 25 V DC)	8	OUT 2	(open drain)
3	IN 4	(RXD RS232)	9	IN 3 +	(opto In +)
4	OUT 4	(TXD RS232)	10	IN 3 –	(opto In –)
5	IN 1	(0 - 24V)	11	OUT 3	(open drain)
6	IN 2	(0 - 24V)	12	OUT 0	(open drain)