Allied Vision



HR Camera Link

hr49CCL

General

Model	hr49CCL
Product code	F004155
Product series	HR Camera Link
Status	Available

Sensor

Sensor type	Area scan
Chroma	Color
Spectrum	Visible
Spectral range	400 nm to 1000 nm
Resolution	7,008 × 7,000 (49.00 MP)
Sensor model	Gpixel GMAX3265-49
Sensor architecture (material)	cmos
Shutter type(s)	Global shutter (GS)
Sensor size	22.43 × 22.4 mm (31.7 mm, Type 2.3)
Pixel size	3.20 µm × 3.20 µm

Pixel formats

Sensor bit depth	8-bit, 10-bit
RGB pixel formats	bayer8, bayer10

Timing and gain

Max. frame rate	17 fps
Exposure time	21 µs to 60 s
Gain	0.0 dB to 18.0 dB

I/Os and power

Non-isolated lines	0 x LVDS input, 0 x LVDS output, 0 x TTL input, 0 x TTL output, 2 x 24V input, 4 x Open drain output,
Specific non-isolated lines	1 x RS232 input, 1 x RS232 output, 0 x RS422 input, 0 x RS422 output,
Opto-isolated lines	1 x Optical isolated input, 0 x Optical isolated input,
I/O connector	12-pin Hirose HR10A-10P-12S
Power supply	10 to 25VDC
Power consumption	External: 9 W (typical)

Operating conditions

Operating temperature	-10 °C to 45 °C (ambient, without condensation)

Mechanical properties

Body dimensions (L x W x H in mm)	76 × 70 × 70
IP class	IP30
Lens mount(s)	M58x0.75
Weight	420 g

On-board memory and FPGA

Non-volatile memory (Flash)	32 MByte

Interfaces

Digital interface	camera link 80-bit
Interface connector	SDR

FW features - image control

Exposure modes	manual, auto, external
Gain modes	auto, manual
White balance modes	auto, manual
Image control features	lut, mirror-image, dpc, shading-correction, ffc

FW features - camera control

Trigger modes/sync	internal, software, external
Camera control features	User Sets, PWM(4), Sequencer,

Quantum Efficiency

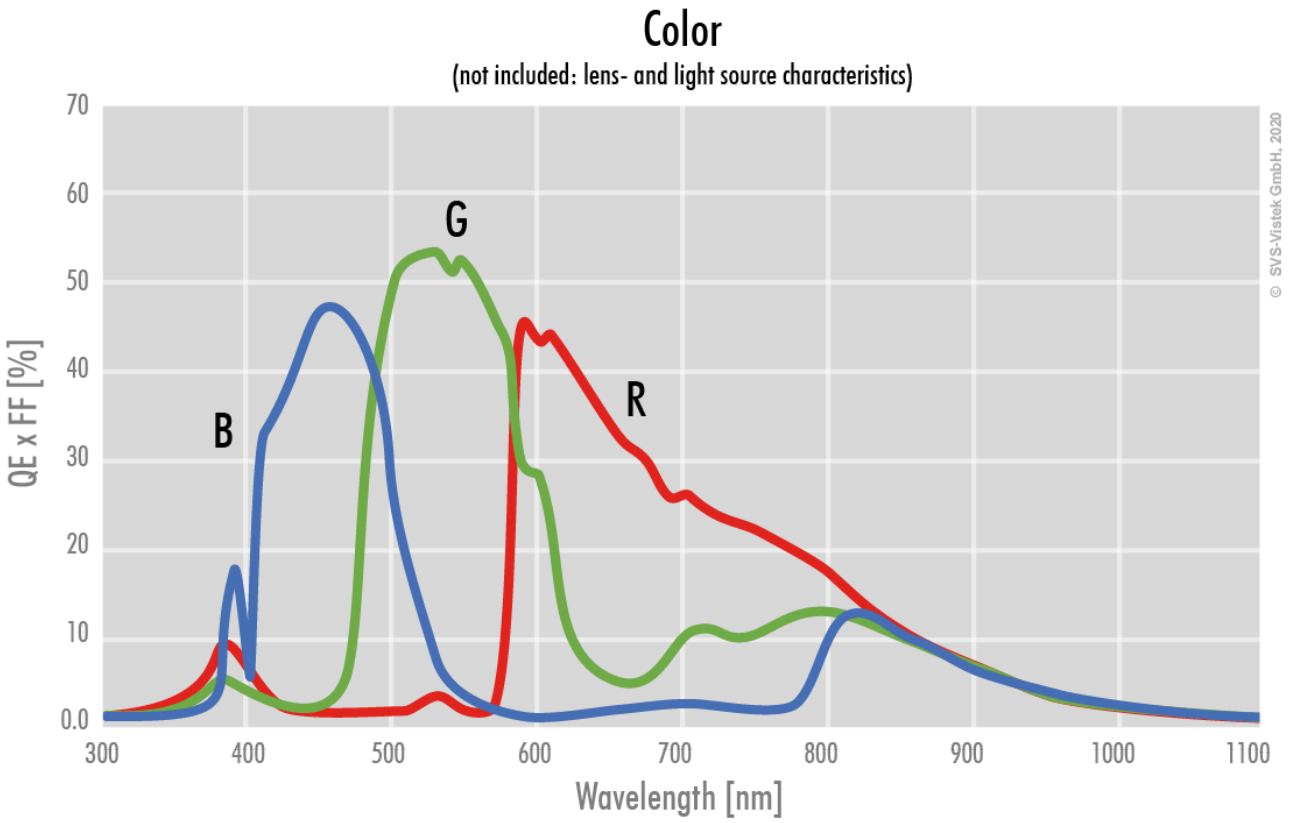

Allied Vision

Technical Drawing

front

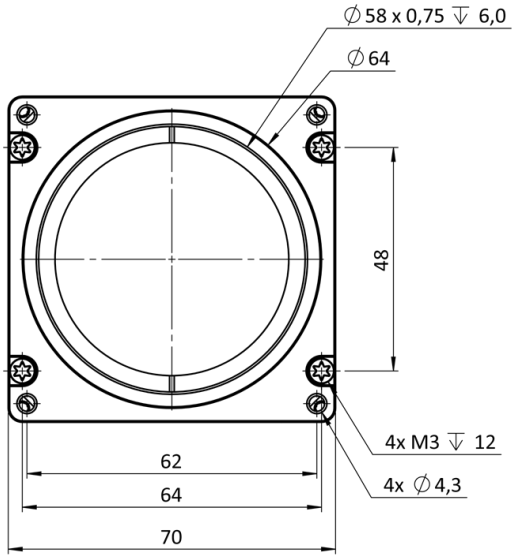

back

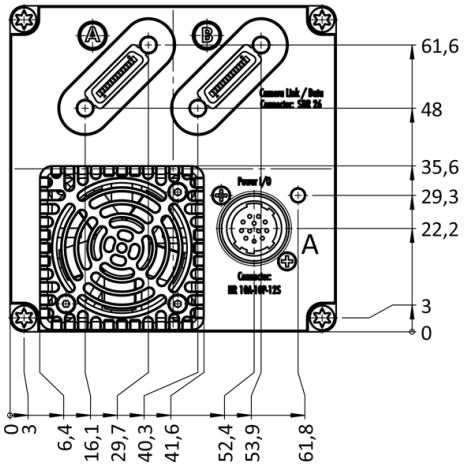

cross section

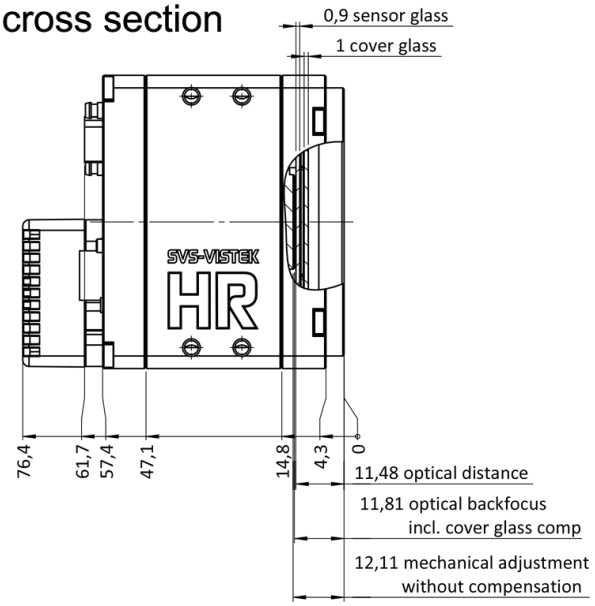

right side

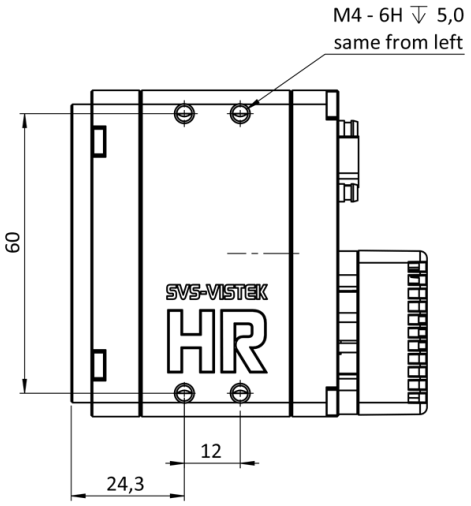

top

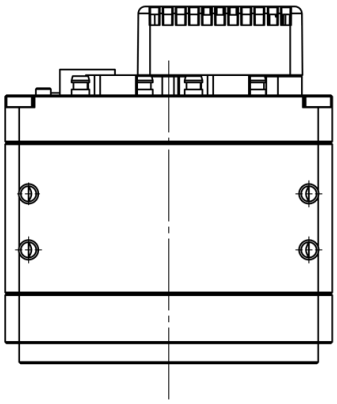

bottom

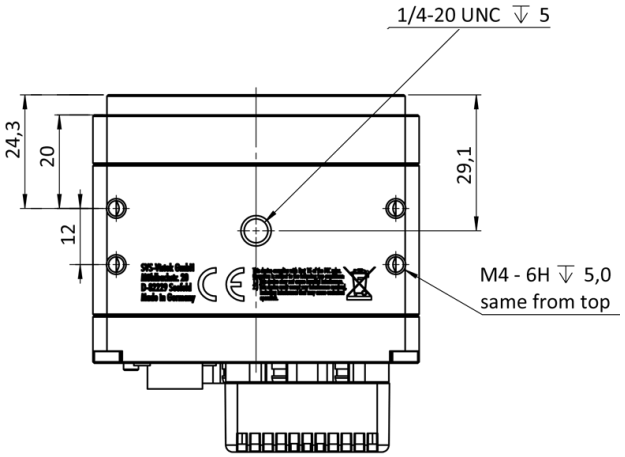

3D

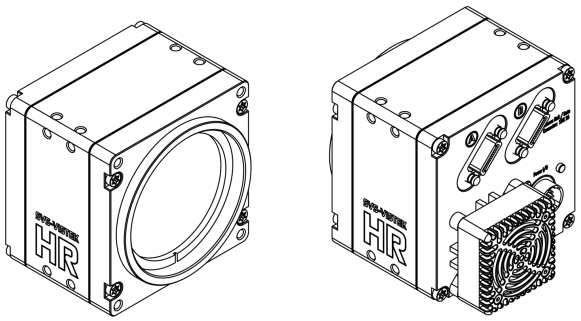

I/O pin assignment

Hirose 12 Pin

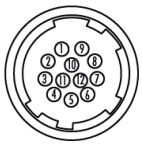

1	VIN –	(GND)	7	OUT 1	(open drain)
2	VIN +	(10 V to 25 V DC)	8	OUT 2	(open drain)
3	IN 4	(RXD RS232)	9	IN 3 +	(opto In +)
4	OUT 4	(TXD RS232)	10	IN 3 –	(opto In –)
5	IN 1	(0 - 24V)	11	OUT 3	(open drain)
6	IN 2	(0 - 24V)	12	OUT 0	(open drain)