Allied Vision



HR 10GigE

hr455CXGE-T

General

Model	hr455CXGE-T
Product code	F004215
Product series	HR 10GigE
Status	Available

Sensor

Sensor type	Area scan
Chroma	Color
Spectrum	Visible
Spectral range	400 nm to 1000 nm
Resolution	9,568 × 6,380 (61.00 MP)
Sensor model	Sony IMX455
Sensor architecture (material)	cmos
Shutter type(s)	Rolling shutter (RS)
Sensor size	35.98 × 23.99 mm (43.24 mm, Type 2.7)
Pixel size	3.76 µm × 3.76 µm

Pixel formats

Sensor bit depth	8-bit, 12-bit, 16-bit
RGB pixel formats	bayer8, bayer12, bayer16

Imaging performance

Dynamic range	81.4 dB
SNR	47 dB

Allied Vision

Timing and gain

Max. frame rate	18 fps
Exposure time	34 µs to 60 s
Gain	0.0 dB to 36.0 dB

I/Os and power

Non-isolated lines	0 x LVDS input, 0 x LVDS output, 0 x TTL input, 0 x TTL output, 2 x 24V input, 4 x Open drain output,
Specific non-isolated lines	1 x RS232 input, 1 x RS232 output, 0 x RS422 input, 0 x RS422 output,
Opto-isolated lines	1 x Optical isolated input, 0 x Optical isolated input,
I/O connector	12-pin Hirose HR10A-10P-12S
Power supply	21 to 25VDC, Power over Ethernet (POE+)
Power consumption	External: 30 W (typical)

Operating conditions

Operating temperature	-10 °C to 70 °C (housing)

Mechanical properties

Body dimensions (L x W x H in mm)	94 × 70 × 70
Filter/protection glass	N-BK7 - AR coating
IP class	IP30
Lens mount(s)	M58x0.75
Weight	590 g

On-board memory and FPGA

Image buffer (RAM)	448 MByte

Interfaces

Digital interface	10gige
Interface connector	(RJ-45)
Vision standard	GigE Vision 2.0

FW features - image control

Exposure modes	manual, auto, external
Gain modes	auto, manual

FW features - image control

White balance modes	auto, manual
Image control features	lut, mirror-image, dpc, shading-correction, ffc

FW features - camera control

Trigger modes/sync	internal, software, external
Camera control features	User Sets, POE, PWM(4), Sequencer,

Quantum Efficiency

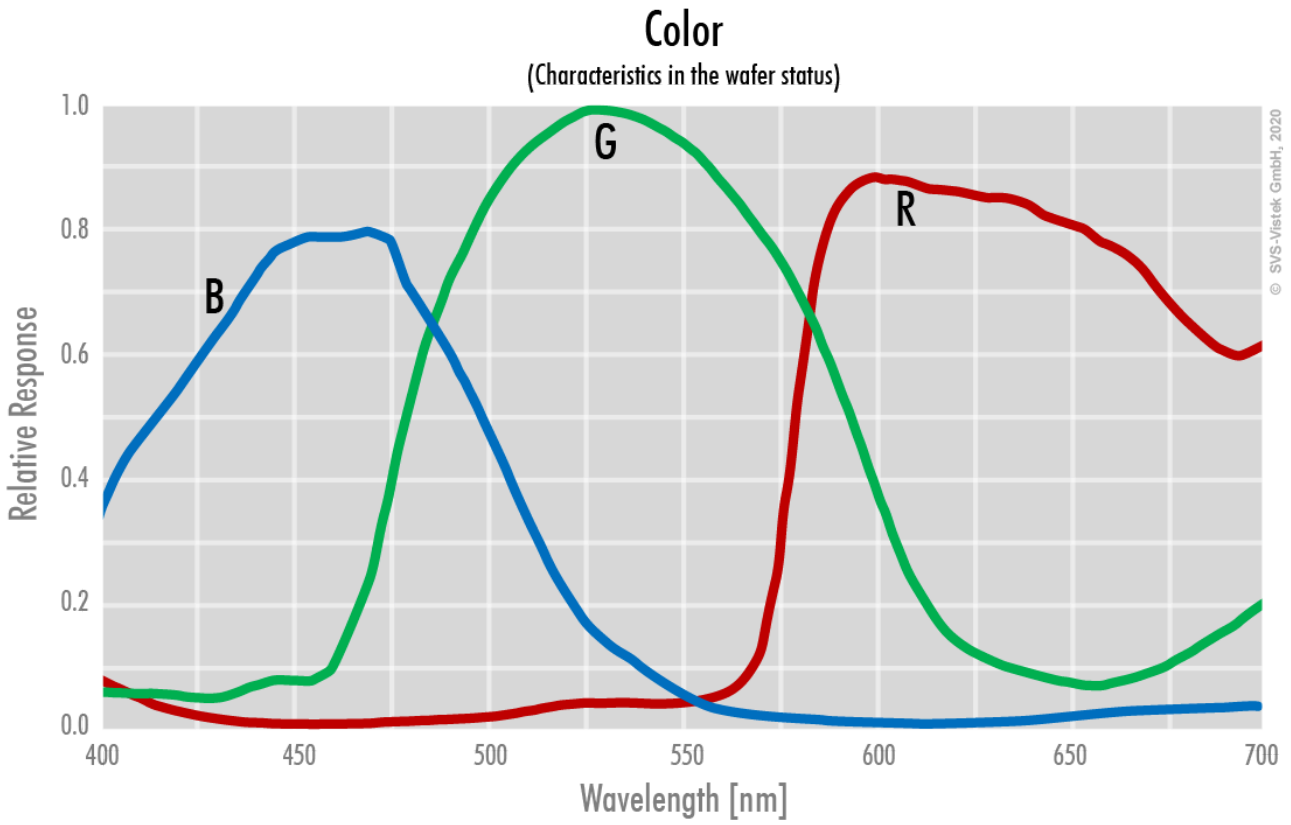

Technical Drawing

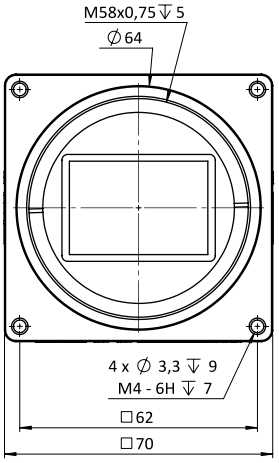

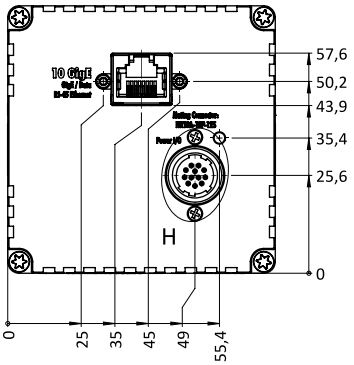

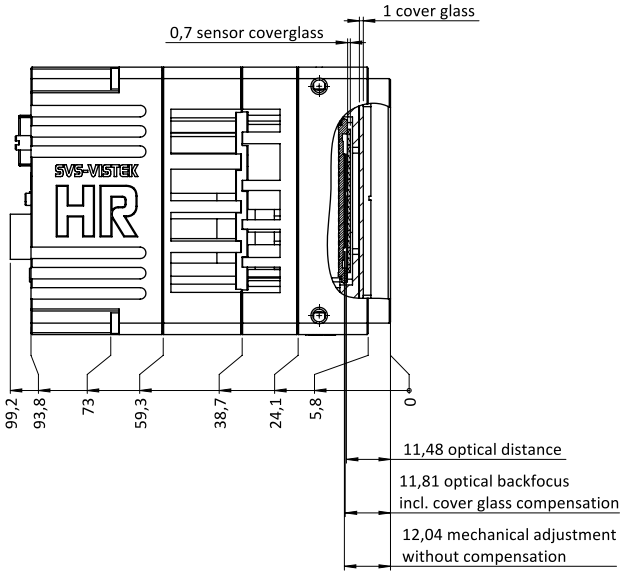

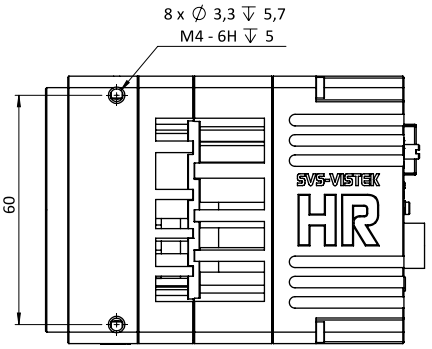

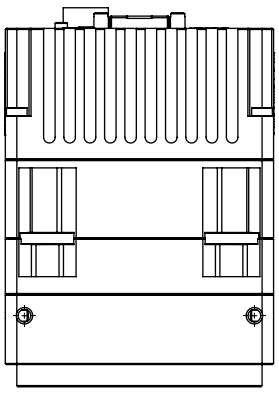

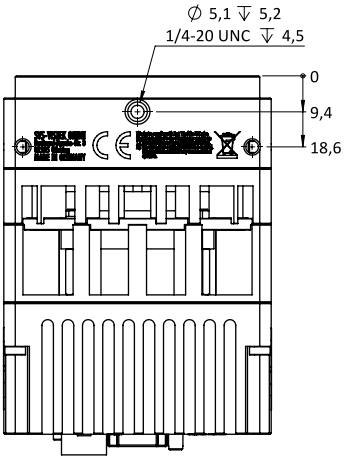

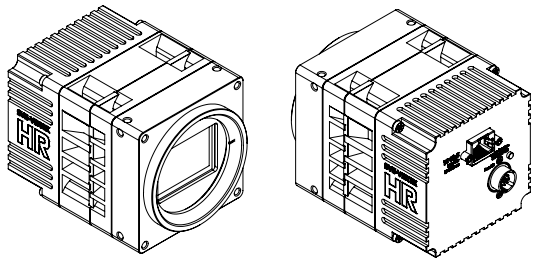

I/O pin assignment

Hirose 12 Pin

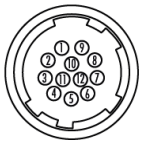

1	VIN –	(GND)	7	OUT 1	(open drain)
2	VIN +	(10 V to 25 V DC)	8	OUT 2	(open drain)
3	IN 4	(RXD RS232)	9	IN 3 +	(opto In +)
4	OUT 4	(TXD RS232)	10	IN 3 –	(opto In –)
5	IN 1	(0 - 24V)	11	OUT 3	(open drain)
6	IN 2	(0 - 24V)	12	OUT 0	(open drain)