Allied Vision

HR 100GigE

hr927M100GE



Preliminary product information. Features and technical specifications are subject to change without notice.

preliminary

General

Model	hr927M100GE
Product code	F004274
Product series	HR 100GigE
Status	Prototype/engineering sample

Sensor

Sensor type	Area scan
Chroma	Mono
Spectrum	Visible
Spectral range	400 nm to 1000 nm
Resolution	10,240 × 10,240 (104.90 MP)
Sensor model	Sony IMX927
Sensor architecture (material)	cmos
Shutter type(s)	Global shutter (GS)
Sensor size	28.06 × 28.06 mm (39.68 mm, Type 2.5)
Pixel size	2.74 µm × 2.74 µm

Pixel formats

Sensor bit depth	8-bit, 10-bit, 12-bit
Monochrome pixel formats	mono8, mono10, mono12

Timing and gain

Max. frame rate	111.8 fps
Exposure time	8 µs to 60 s
Gain	0.0 dB to 48.0 dB

I/Os and power

Non-isolated lines	0 x LVDS input, 0 x LVDS output, 0 x TTL input, 0 x TTL output, 2 x 24V input, 2 x Open drain output,
Specific non-isolated lines	0 x RS232 input, 0 x RS232 output, 1 x RS422 input, 1 x RS422 output,
Opto-isolated lines	0 x Optical isolated input, 0 x Optical isolated input,
I/O connector	12-pin Hirose HR10A-10P-12S
Power supply	24 to 25VDC
Power consumption	External: 30 W (typical)

Operating conditions

Operating temperature	-10 °C to 60 °C (housing)

Mechanical properties

Body dimensions (L x W x H in mm)	93 × 62 × 62
Filter/protection glass	K9 - AR coating - 400-850nm
IP class	IP30
Lens mount(s)	M58x0.75
Weight	550 g

On-board memory and FPGA

Image buffer (RAM)	4032 MByte
Non-volatile memory (Flash)	32768 MByte

Interfaces

Digital interface	100gige
Interface connector	(QSFP28)
Vision standard	GigE Vision 3.0

FW features - image control

Exposure modes	manual, auto, external
Gain modes	auto, manual
Image control features	roi, lut, mirror-image, dpc, shading-correction, ffc

FW features - camera control

Camera control features	PTP, RDMA support, User Sets, PWM(4), Sequencer,

preliminary

preliminary

Allied Vision

Quantum Efficiency

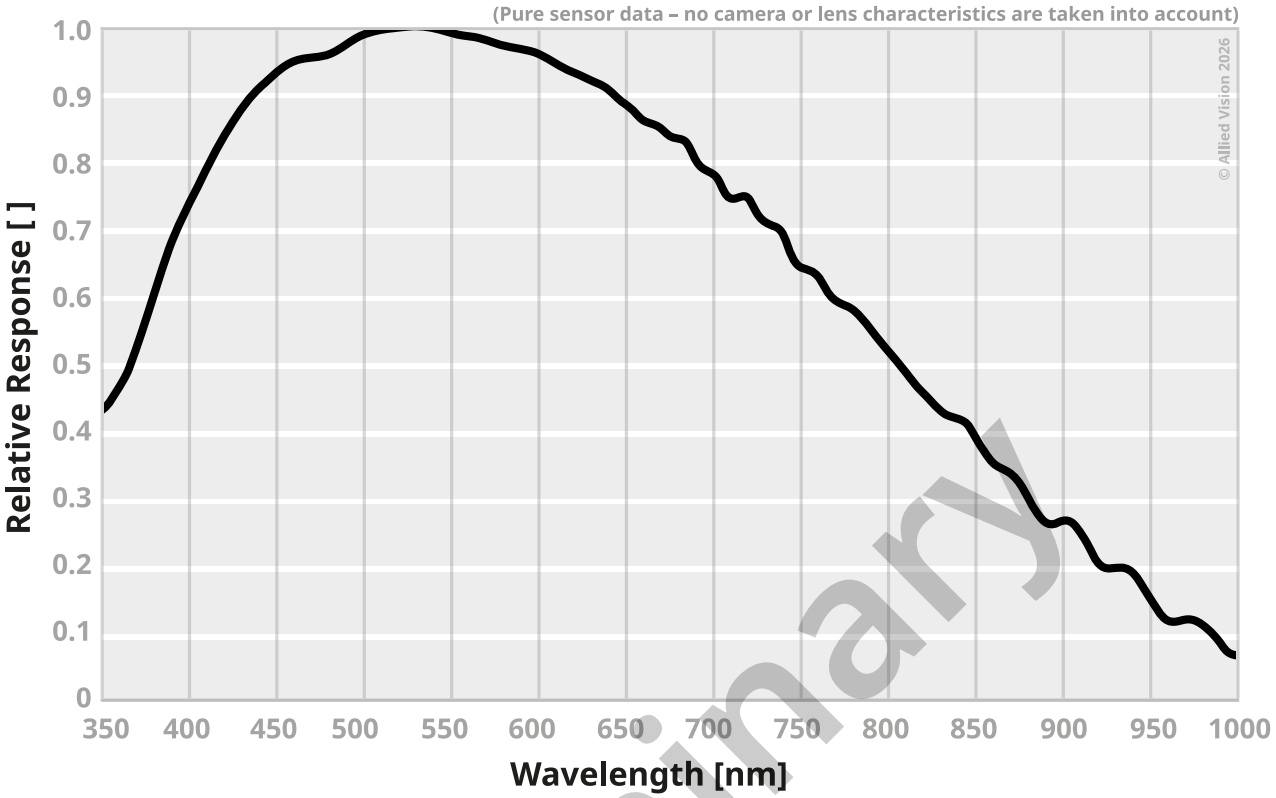

preliminary

Technical Drawing

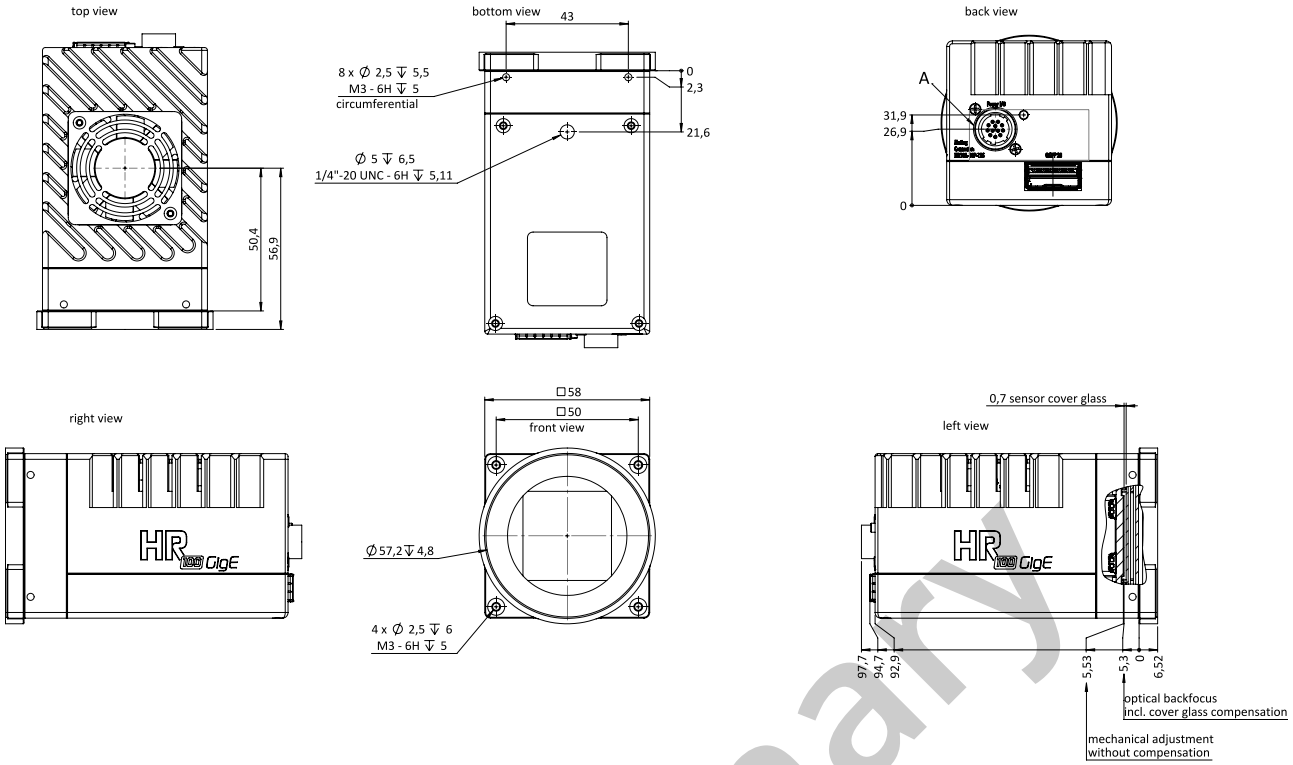

I/O pin assignment

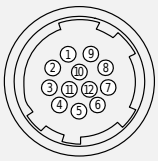

1	VIn- (GND)
2	VIn+ (24 V DC)
3	In 4 (RxD RS232)
4	Out 4 (TxD RS232)
5	In 1 (0 ... 24 V)
6	In 2 (0 ... 24 V)
7	Out 1 (open drain)
8	Out 2 (open drain)
9	In 3+(opto In+)
10	In 3-(opto In-)
11	Out 3 (open drain)
12	Out 0 (open drain)

preliminary