Allied Vision

FXO CoaXPress

fxo532CCX12-2C

General

Model	fxo532CCX12-2C
Product code	F002257
Product series	FXO CoaXPress
Status	Available

Sensor

Sensor type	Area scan
Chroma	Color
Spectrum	Visible
Spectral range	400 nm to 1000 nm
Resolution	5,328 × 3,040 (16.20 MP)
Sensor model	Sony IMX532
Sensor architecture (material)	cmos
Shutter type(s)	global-shutter
Sensor size	14.6 × 8.33 mm (16.81 mm, 16.8mm (Type 1.1))
Pixel size	2.74 µm × 2.74 µm

Pixel formats

Sensor bit depth	8-Bit,12-Bit
RGB pixel formats	bayer8, bayer12

Imaging performance

Dynamic range	72 dB
SNR	39 dB

Allied Vision

Timing and gain

Max. frame rate	144 fps
Exposure time	21 µs to 60 s
Gain	0.0 dB to 48.0 dB

I/Os and power

Non-isolated lines	0 x LVDS input, 0 x LVDS output, 0 x TTL input, 0 x TTL output, 2 x 24V input, 4 x Open drain output,
Specific non-isolated lines	1 x RS232 input, 1 x RS232 output, 0 x RS422 input, 0 x RS422 output,
Opto-isolated lines	1 x Optical isolated input, 0 x Optical isolated input,
Power supply	10 to 25VDC, Power over CoaXPress
Power consumption	External: 14 W (typical)

Operating conditions

Operating temperature (housing)	-10 °C to 60 °C

Mechanical properties

Body dimensions (L x W x H in mm)	73 × 50 × 50
Filter/protection glass	IR-Cut 680
IP class	IP30
Lens mount(s)	C-Mount
Weight	240 g

On-board memory and FPGA

Non-volatile memory (Flash)	32 MByte

Interfaces

Digital interface	cxp-12 with 2 connections
Interface connector	(micro-BNC)

FW features - image control

Exposure modes	Manual, Auto, External
Gain modes	Auto, Manual
White balance modes	auto, manual
Image control features	FW Features - Image Control

FW features - camera control

Trigger modes/sync	INTERNAL,SOFTWARE,EXTERNAL
Camera control features	PoCxP, User Sets, PWM(4), Sequencer,

Quantum Efficiency

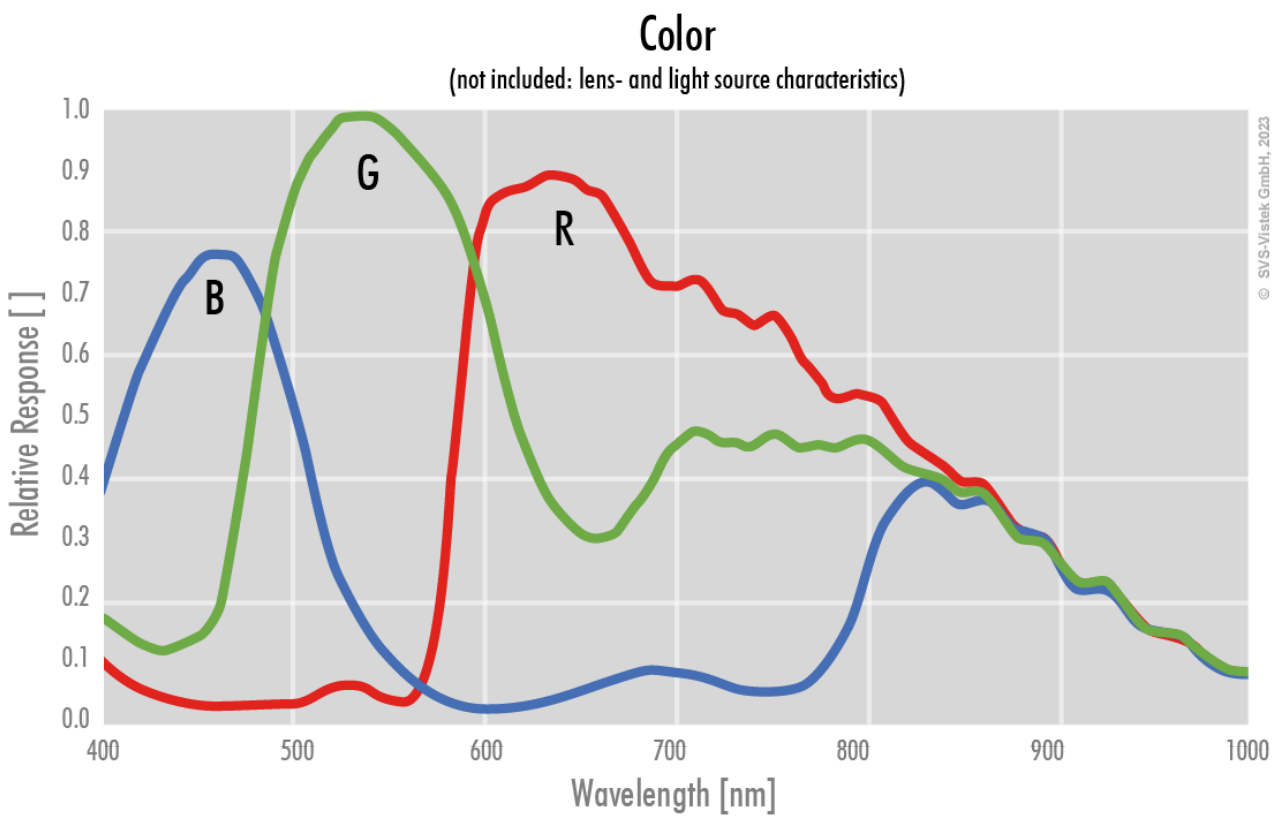

Allied Vision

Technical Drawing

back view

front view

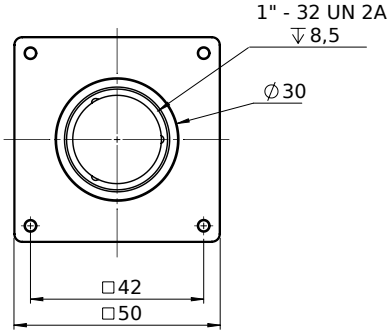

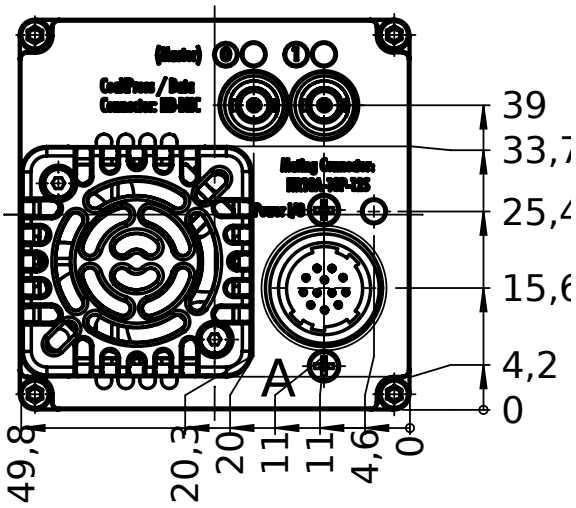

left view

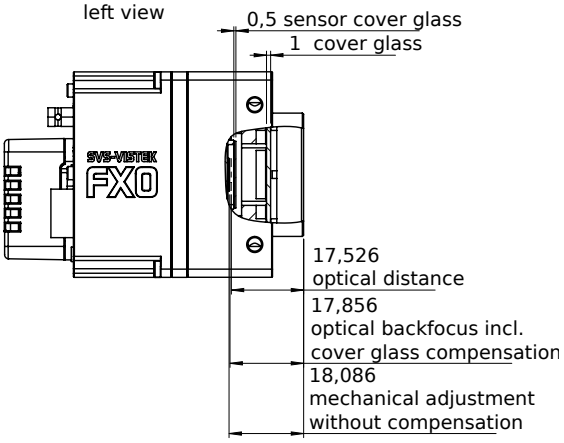

right view

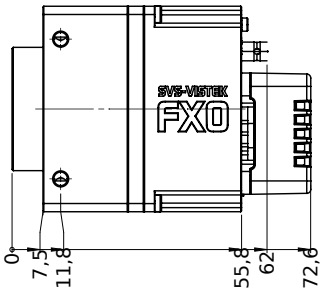

top view

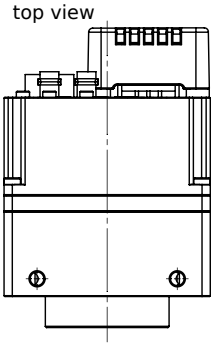

bottom view

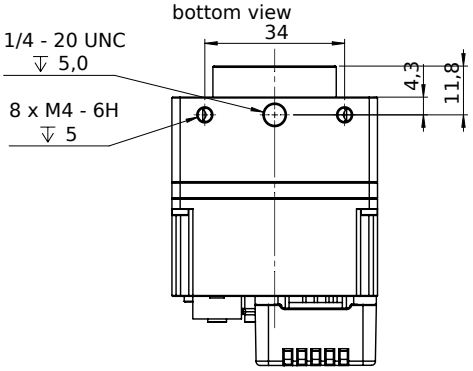

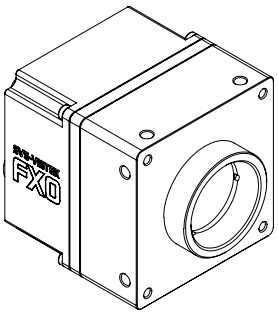

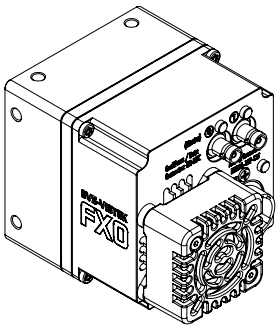

I/O pin assignment

Hirose 12 Pin

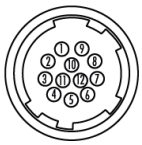

1	VIN –	(GND)	7	OUT 1	(open drain)
2	VIN +	(10 V to 25 V DC)	8	OUT 2	(open drain)
3	IN 4	(RXD RS232)	9	IN 3 +	(opto In +)
4	OUT 4	(TXD RS232)	10	IN 3 –	(opto In –)
5	IN 1	(0 - 24V)	11	OUT 3	(open drain)
6	IN 2	(0 - 24V)	12	OUT 0	(open drain)