Allied Vision



FXO CoaXPress

fxo537CCX12-2C

General

Model	fxo537CCX12-2C
Product code	F002255
Product series	FXO CoaXPress
Status	Available

Sensor

Sensor type	Area scan
Chroma	Color
Spectrum	Visible
Spectral range	400 nm to 1000 nm
Resolution	2,448 × 2,048 (5.00 MP)
Sensor model	Sony IMX537
Sensor architecture (material)	cmos
Shutter type(s)	Global shutter (GS)
Sensor size	6.71 × 5.61 mm (8.75 mm, Type 1/1.8)
Pixel size	2.74 µm × 2.74 µm

Pixel formats

Sensor bit depth	12-bit, 8-bit
RGB pixel formats	bayer12, bayer8

Imaging performance

Dynamic range	72 dB
SNR	39 dB

Timing and gain

Max. frame rate	262 fps
Exposure time	5 µs to 60 s
Gain	0.0 dB to 48.0 dB

I/Os and power

Non-isolated lines	0 x LVDS input, 0 x LVDS output, 0 x TTL input, 0 x TTL output, 2 x 24V input, 4 x Open drain output,
Specific non-isolated lines	1 x RS232 input, 1 x RS232 output, 0 x RS422 input, 0 x RS422 output,
Opto-isolated lines	1 x Optical isolated input, 0 x Optical isolated input,
I/O connector	12-pin Hirose HR10A-10P-12S
Power supply	10 to 25VDC, Power over CoaXPress
Power consumption	External: 13 W (typical)

Operating conditions

Operating temperature	-10 °C to 60 °C (housing)
Humidity	10 % to 90 % (non-condensing)

Mechanical properties

Body dimensions (L x W x H in mm)	73 × 50 × 50
Filter/protection glass	IR-Cut - 680nm
IP class	IP30
Lens mount(s)	C-Mount
Weight	240 g

On-board memory and FPGA

Non-volatile memory (Flash)	32 MByte

Interfaces

Digital interface	cxp-12 with 2 connections
Interface connector	(micro-BNC)
Vision standard	CoaXPress 2.0

FW features - image control

Exposure modes	auto, external, manual

FW features - image control

Gain modes	auto, manual
White balance modes	auto, manual
Image control features	lut, mirror-image, roi

FW features - camera control

Trigger modes/sync	external, internal, software

Quantum Efficiency

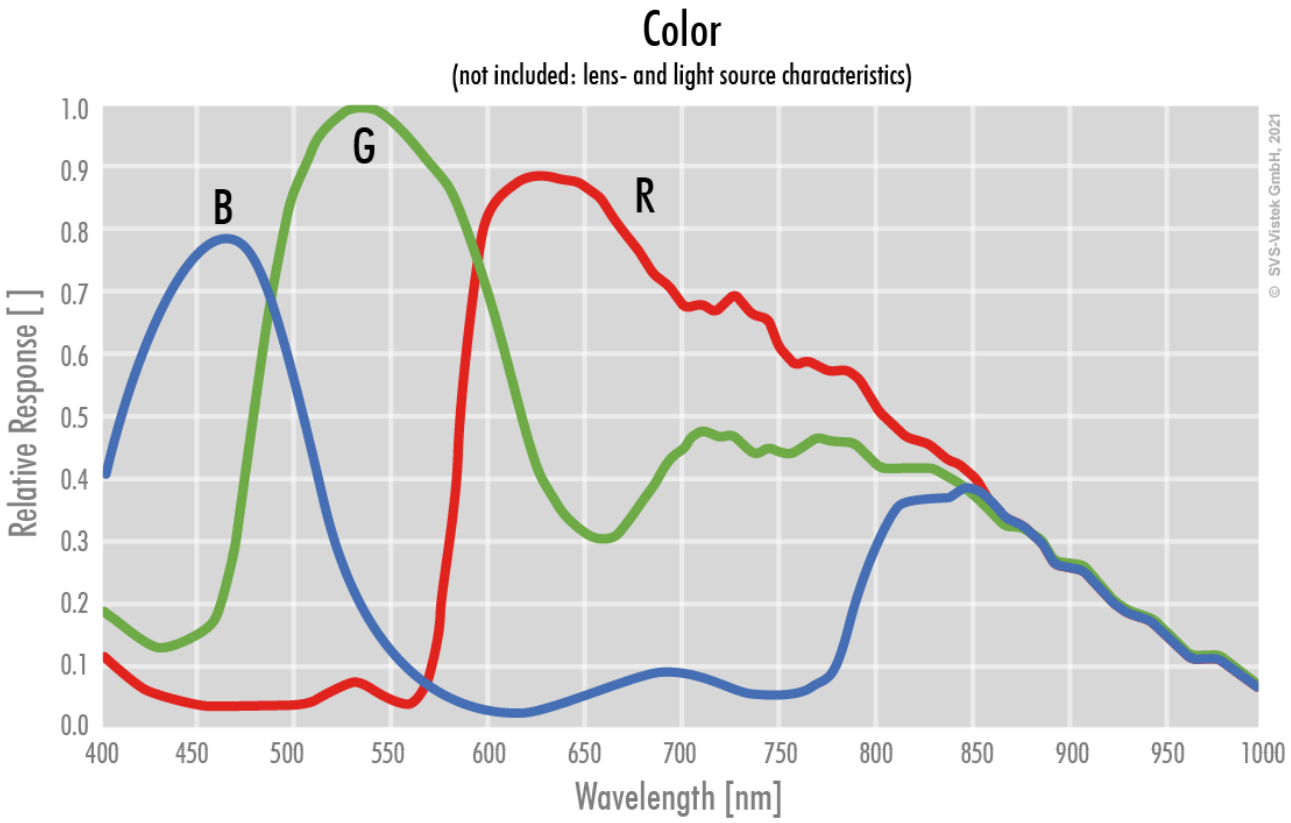

Technical Drawing

back view

front view

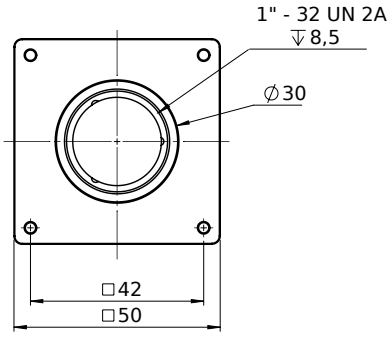

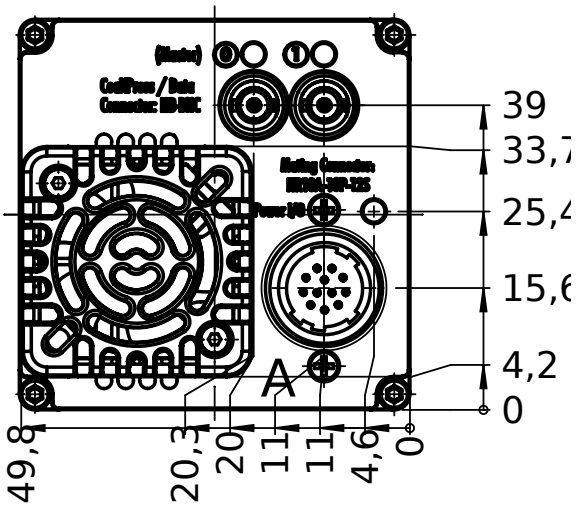

left view

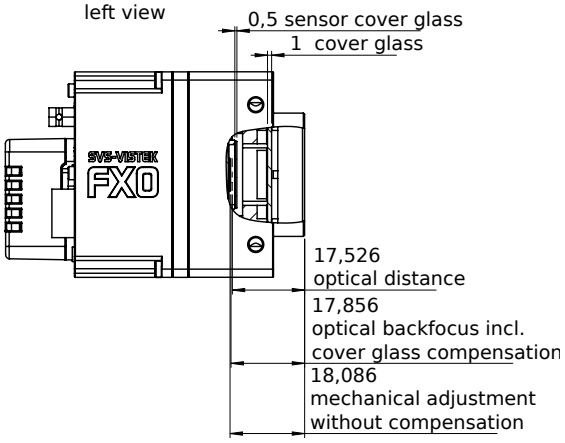

right view

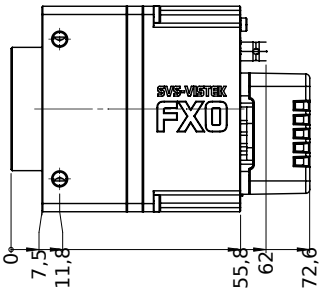

top view

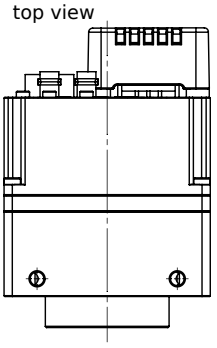

bottom view

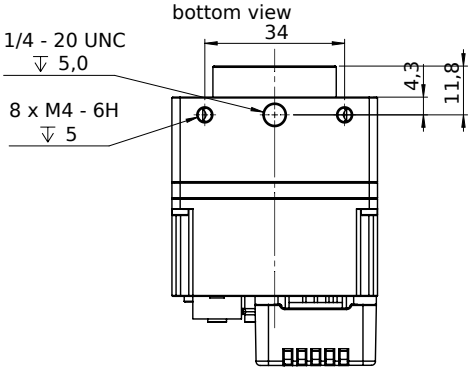

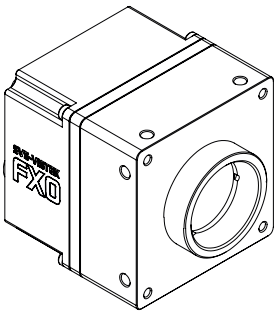

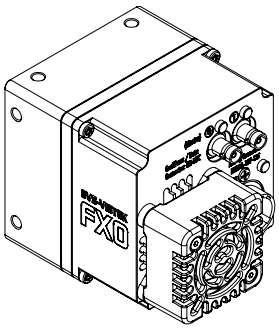

I/O pin assignment

Hirose 12 Pin

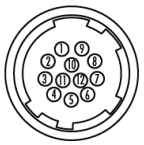

1	VIN –	(GND)	7	OUT 1	(open drain)
2	VIN +	(10 V to 25 V DC)	8	OUT 2	(open drain)
3	IN 4	(RXD RS232)	9	IN 3 +	(opto In +)
4	OUT 4	(TXD RS232)	10	IN 3 –	(opto In –)
5	IN 1	(0 - 24V)	11	OUT 3	(open drain)
6	IN 2	(0 - 24V)	12	OUT 0	(open drain)