Allied Vision

FXO CoaXPress

fxo545MCX



General

Model	fxo545MCX
Product code	F002126
Product series	FXO CoaXPress
Status	Available

Sensor

Sensor type	Area scan
Chroma	Mono
Spectrum	Visible
Spectral range	400 nm to 1000 nm
Resolution	4,096 × 3,000 (12.30 MP)
Sensor model	Sony IMX545
Sensor architecture (material)	cmos
Shutter type(s)	Global shutter (GS)
Sensor size	11.22 × 8.22 mm (13.91 mm, Type 1/1.1)
Pixel size	2.74 µm × 2.74 µm

Pixel formats

Sensor bit depth	12-bit, 8-bit
Monochrome pixel formats	mono12, mono8

Imaging performance

Dynamic range	72 dB
SNR	39 dB

Allied Vision

Timing and gain

Max. frame rate	61 fps
Exposure time	5 µs to 60 s
Gain	0.0 dB to 48.0 dB

I/Os and power

Non-isolated lines	0 x LVDS input, 0 x LVDS output, 0 x TTL input, 0 x TTL output, 2 x 24V input, 4 x Open drain output,
Specific non-isolated lines	1 x RS232 input, 1 x RS232 output, 0 x RS422 input, 0 x RS422 output,
Opto-isolated lines	1 x Optical isolated input, 0 x Optical isolated input,
I/O connector	12-pin Hirose HR10A-10P-12S
Power supply	10 to 25VDC, Power over CoaXPress
Power consumption	External: 8 W (typical)

Operating conditions

Operating temperature	-10 °C to 65 °C (housing)
Humidity	10 % to 90 % (non-condensing)

Mechanical properties

Body dimensions (L x W x H in mm)	70 × 50 × 50
Filter/protection glass	K9 - AR coating - 400-850nm
IP class	IP30
Lens mount(s)	C-Mount
Weight	240 g

On-board memory and FPGA

Non-volatile memory (Flash)	32 MByte

Interfaces

Digital interface	cxp-12 with 1 connection
Interface connector	(micro-BNC)
Vision standard	CoaXPress 2.0

FW features - image control

Exposure modes	auto, external, manual

FW features - image control

Gain modes	auto, manual
Image control features	dpc, ffc, lut, mirror-image, roi, shading-correction

FW features - camera control

Trigger modes/sync	external, internal, software

Quantum Efficiency

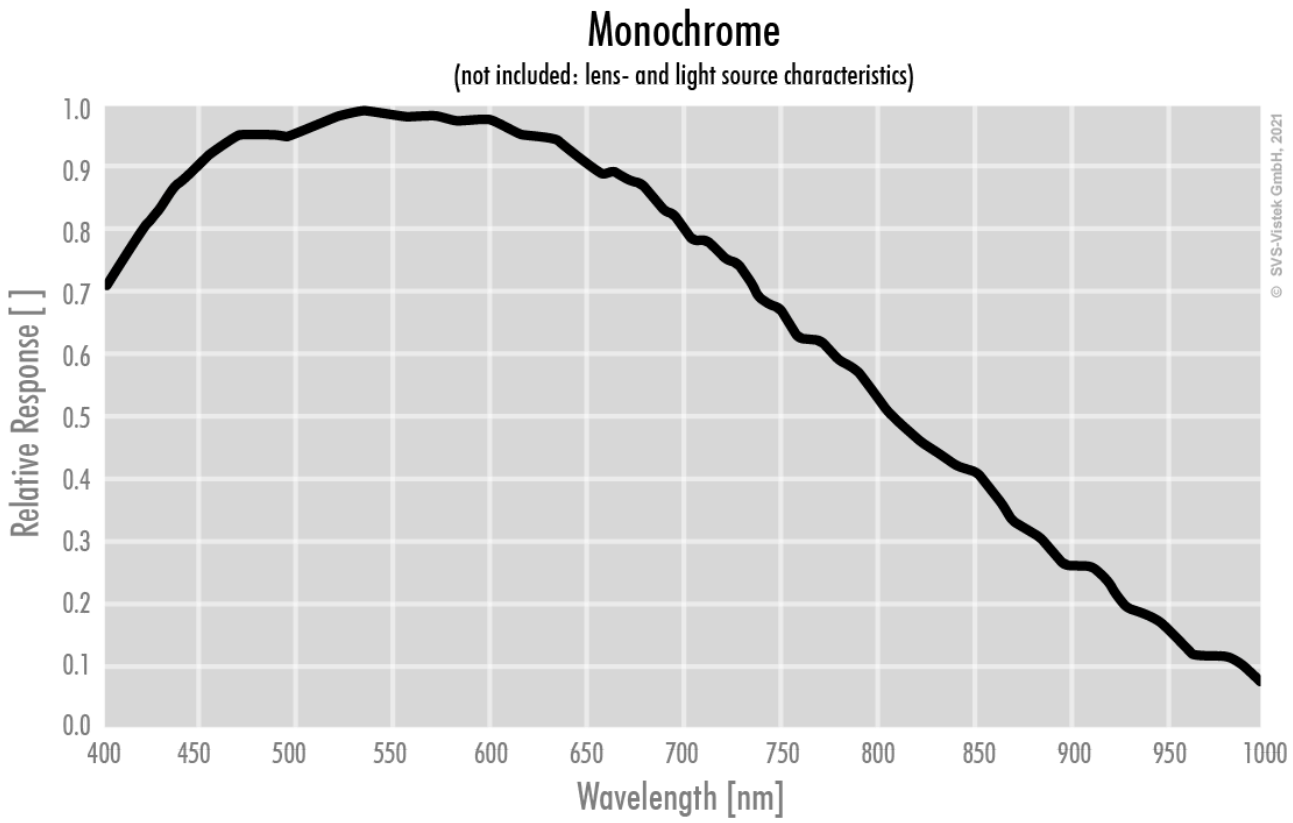

Technical Drawing

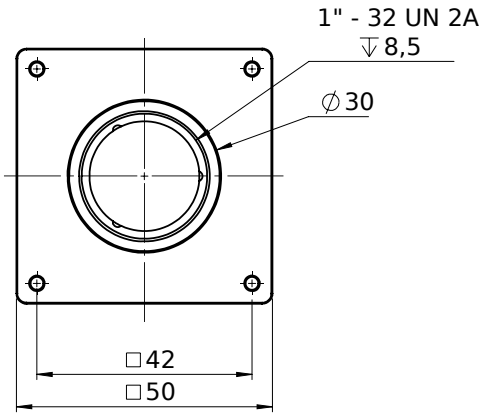

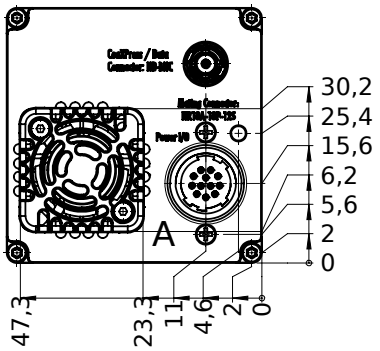

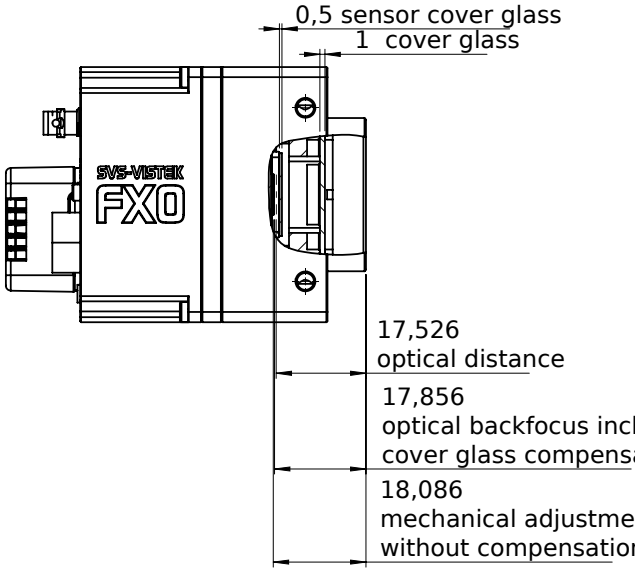

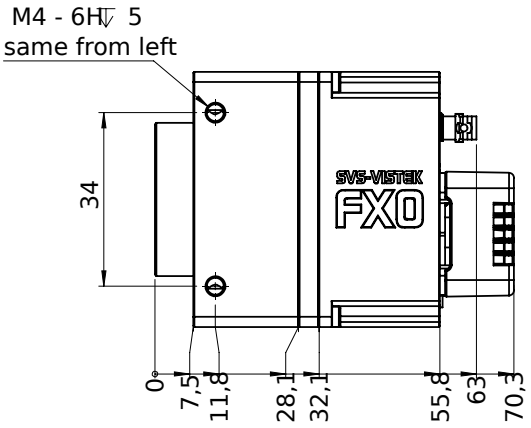

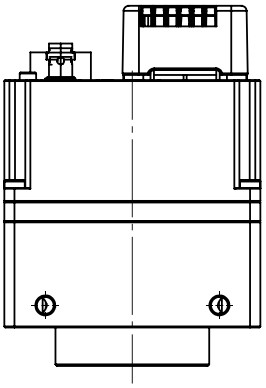

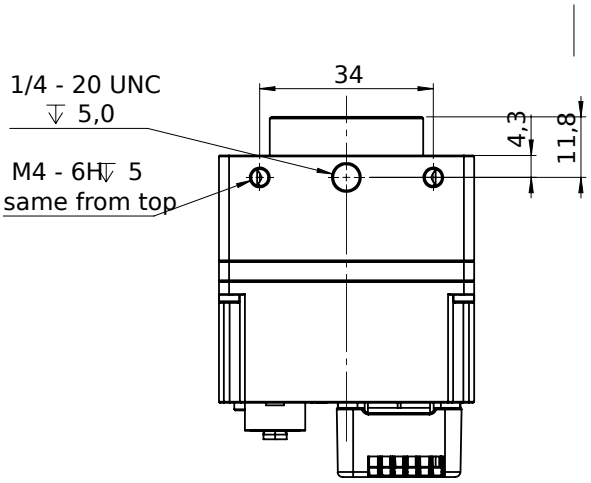

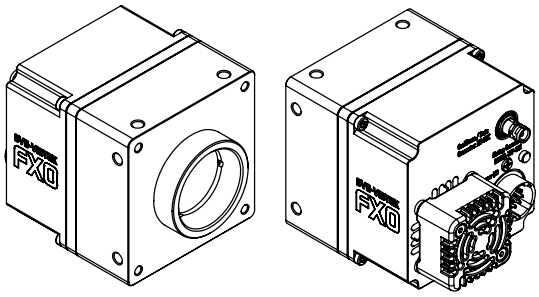

I/O pin assignment

Hirose 12 Pin

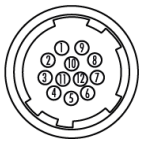

1	VIN –	(GND)
2	VIN +	(10 V to 25 V DC)
3	IN 4	(RXD RS232)
4	OUT 4	(TXD RS232)
5	IN 1	(0 - 24V)
6	IN 2	(0 - 24V)
7	OUT 1	(open drain)
8	OUT 2	(open drain)
9	IN 3 +	(opto In +)
10	IN 3 –	(opto In –)
11	OUT 3	(open drain)
12	OUT 0	(open drain)