Allied Vision

FXO 10GigE

fxo530CXGE



General

Model	fxo530CXGE
Product code	F002444
Product series	FXO 10GigE
Status	Available

Sensor

Sensor type	Area scan
Chroma	Color
Spectrum	Visible
Spectral range	400 nm to 1000 nm
Resolution	5,328 × 4,608 (24.60 MP)
Sensor model	Sony IMX530
Sensor architecture (material)	cmos
Shutter type(s)	Global shutter (GS)
Sensor size	14.6 × 12.63 mm (19.3 mm, Type 1.2)
Pixel size	2.74 µm × 2.74 µm

Pixel formats

Sensor bit depth	12-bit, 8-bit
RGB pixel formats	bayer12, bayer8

Timing and gain

Max. frame rate	49.6 fps
Exposure time	5 µs to 60 s
Gain	0.0 dB to 48.0 dB

I/Os and power

Non-isolated lines	0 x LVDS input, 0 x LVDS output, 0 x TTL input, 0 x TTL output, 2 x 24V input, 4 x Open drain output,
Specific non-isolated lines	1 x RS232 input, 1 x RS232 output, 0 x RS422 input, 0 x RS422 output,
Opto-isolated lines	1 x Optical isolated input, 0 x Optical isolated input,
I/O connector	12-pin Hirose HR10A-10P-12S
Power supply	10 to 25VDC
Power consumption	External: 12 W (typical)

Operating conditions

Operating temperature	-10 °C to 60 °C (housing)
Humidity	10 % to 90 % (non-condensing)

Mechanical properties

Body dimensions (L x W x H in mm)	76 × 50 × 50
Filter/protection glass	IR-Cut - 680nm
IP class	IP30
Lens mount(s)	C-Mount
Weight	240 g

On-board memory and FPGA

Image buffer (RAM)	896 MByte
Non-volatile memory (Flash)	32 MByte

Interfaces

Digital interface	10gige
Interface connector	(RJ-45)
Vision standard	GigE Vision 2.0, 3.0

FW features - image control

Exposure modes	auto, external, manual
Gain modes	auto, manual
White balance modes	auto, manual
Image control features	color-transformation, lut, mirror-image, roi

FW features - camera control

Trigger modes/sync	external, internal, software

Quantum Efficiency

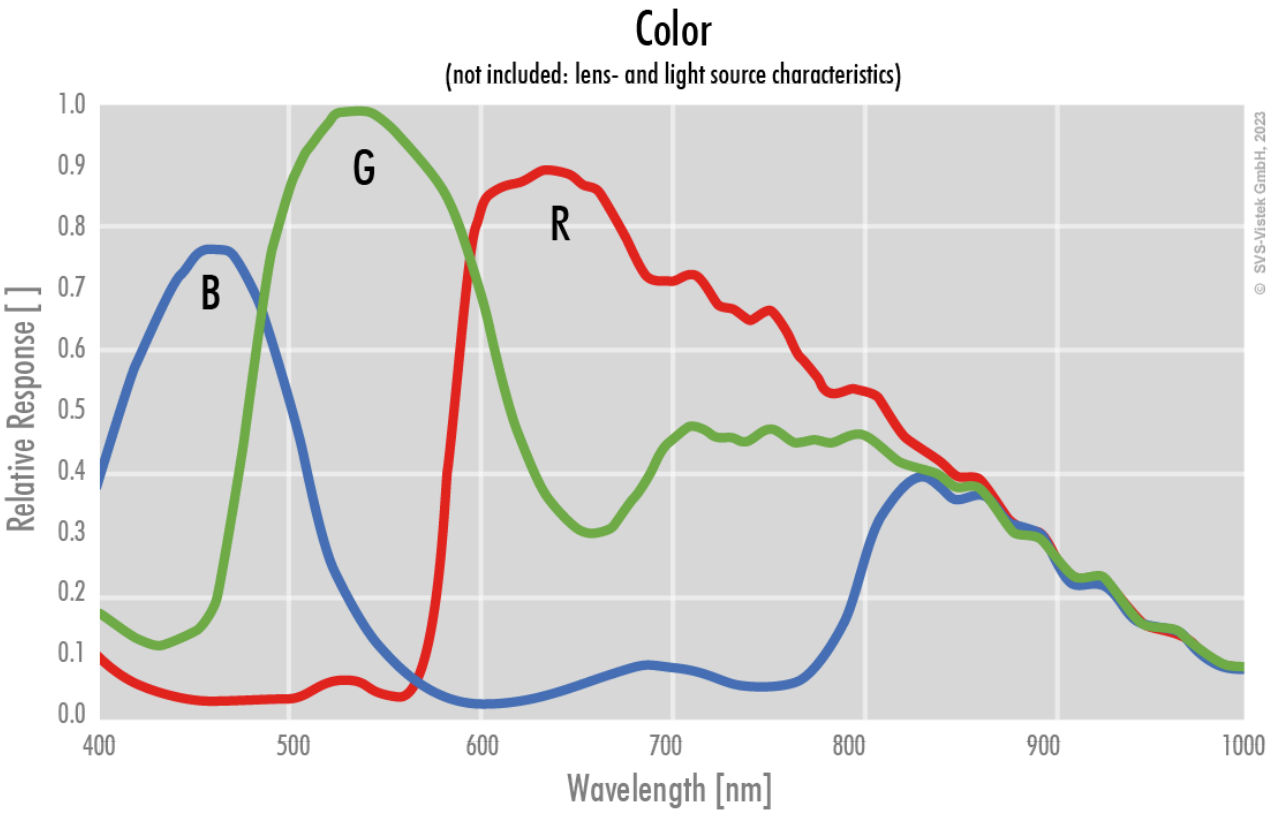

Technical Drawing

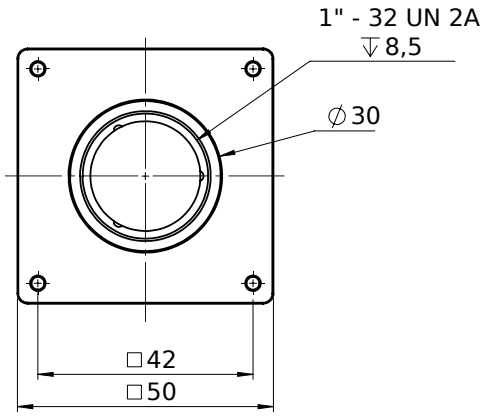

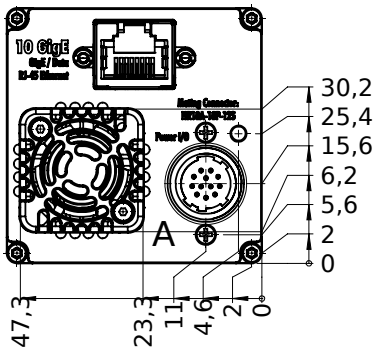

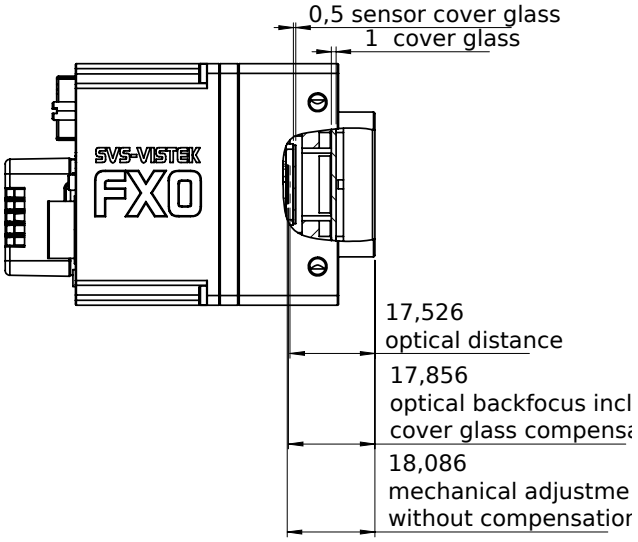

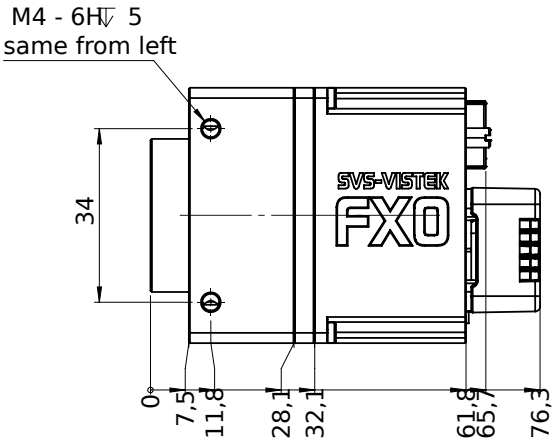

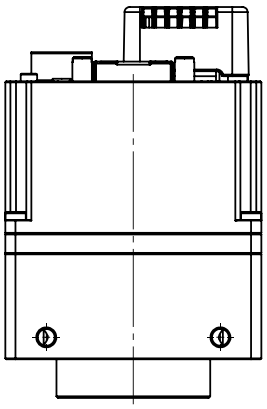

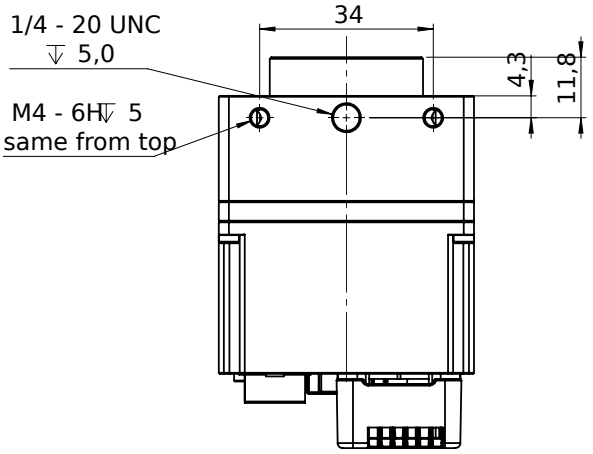

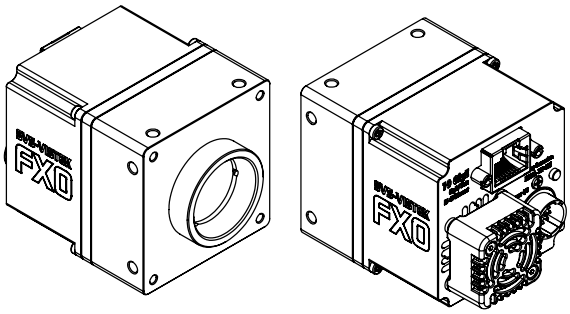

I/O pin assignment

Hirose 12 Pin

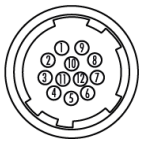

1	VIN –	(GND)	7	OUT 1	(open drain)
2	VIN +	(10 V to 25 V DC)	8	OUT 2	(open drain)
3	IN 4	(RXD RS232)	9	IN 3 +	(opto In +)
4	OUT 4	(TXD RS232)	10	IN 3 –	(opto In –)
5	IN 1	(0 - 24V)	11	OUT 3	(open drain)
6	IN 2	(0 - 24V)	12	OUT 0	(open drain)