Allied Vision

# FXO 10GigE

## fxo901MXGE



## General

| | |
|---|---|
| Model | fxo901MXGE |
| Product code | F002364 |
| Product series | FXO 10GigE |
| Status | Available |

## Sensor

| | |
|---|---|
| Sensor type | Area scan |
| Chroma | Mono |
| Spectrum | Visible |
| Spectral range | 400 nm to 1000 nm |
| Resolution | 8,016 × 2,048 (16.40 MP) |
| Sensor model | Sony IMX901 |
| Sensor architecture (material) | cmos |
| Shutter type(s) | Global shutter (GS) |
| Sensor size | 21.96 × 5.61 mm (22.67 mm, Type 1.4) |
| Pixel size | 2.74 µm × 2.74 µm |

## Pixel formats

| | |
|---|---|
| Sensor bit depth | 12-bit, 8-bit |
| Monochrome pixel formats | mono12, mono8 |

## Timing and gain

| | |
|---|---|
| Max. frame rate | 74 fps |
| Exposure time | 9 µs to 60 s |
| Gain | 0.0 dB to 48.0 dB |

## I/Os and power

| | |
|---|---|
| Non-isolated lines | 0 x LVDS input, 0 x LVDS output, 0 x TTL input, 0 x TTL output, 2 x 24V input, 4 x Open drain output, |
| Specific non-isolated lines | 1 x RS232 input, 1 x RS232 output, 0 x RS422 input, 0 x RS422 output, |
| Opto-isolated lines | 1 x Optical isolated input, 0 x Optical isolated input, |
| I/O connector | 12-pin Hirose HR10A-10P-12S |
| Power supply | 10 to 25VDC, Power over Ethernet |
| Power consumption | External: 11 W (typical) |

## Operating conditions

| | |
|---|---|
| Operating temperature | -10 °C to 60 °C (housing) |
| Humidity | 10 % to 90 % (non-condensing) |

## Mechanical properties

| | |
|---|---|
| Body dimensions (L x W x H in mm) | 76 × 50 × 50 |
| Filter/protection glass | None |
| IP class | IP30 |
| Lens mount(s) | C-Mount |
| Weight | 240 g |

## On-board memory and FPGA

| | |
|---|---|
| Image buffer (RAM) | 896 MByte |
| Non-volatile memory (Flash) | 32 MByte |

## Interfaces

| | |
|---|---|
| Digital interface | 10gige |
| Interface connector | (RJ-45) |
| Vision standard | GigE Vision 2.0 |

## FW features - image control

| | |
|---|---|
| Exposure modes | auto, external, manual |
| Gain modes | auto, manual |
| Image control features | dpc, ffc, lut, mirror-image, roi, shading-correction |

## FW features - camera control

| | |
|---|---|
| Trigger modes/sync | external, internal, software |

## Quantum Efficiency

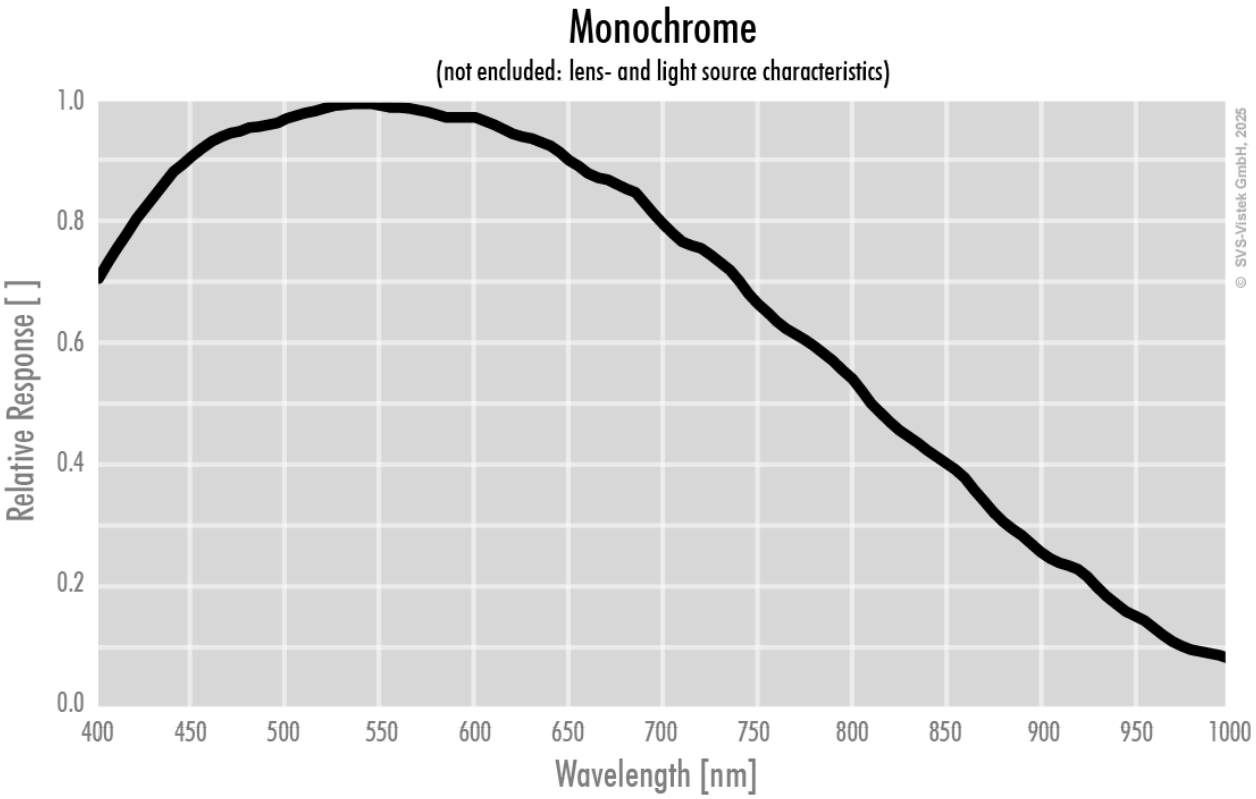

Allied Vision

# Technical Drawing

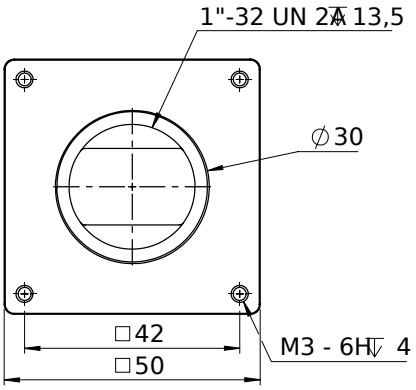


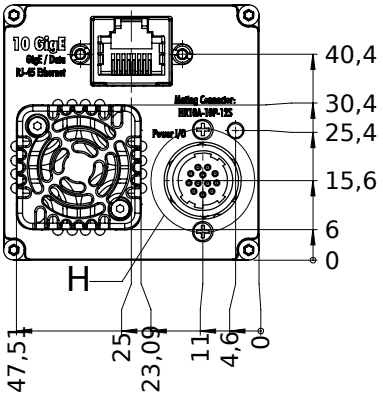


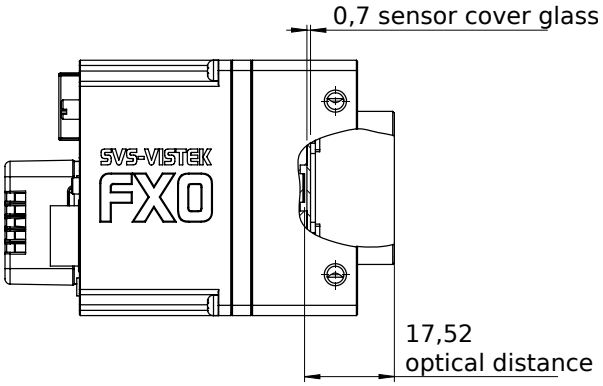


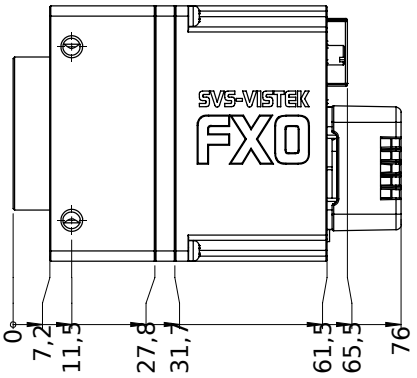

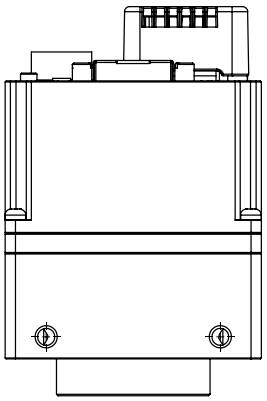

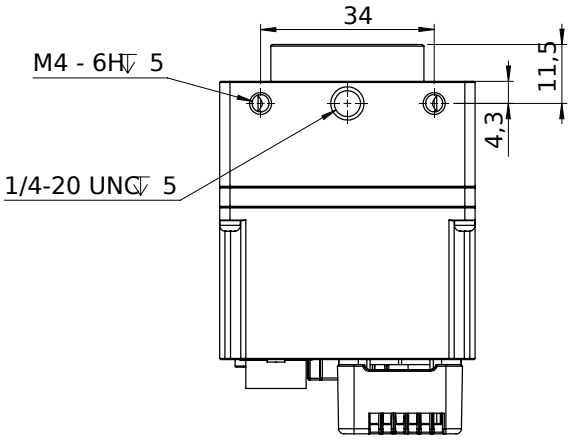


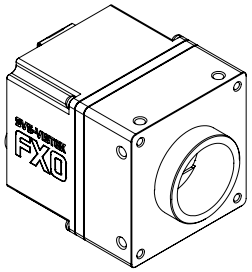

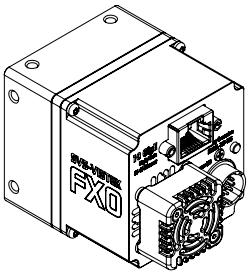

## I/O pin assignment

Hirose 12 Pin

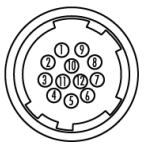

| | | | | | |
|---|---|---|---|---|---|
| 1 | VIN – | (GND) | 7 | OUT 1 | (open drain) |
| 2 | VIN + | (10 V to 25 V DC) | 8 | OUT 2 | (open drain) |
| 3 | IN 4 | (RXD RS232) | 9 | IN 3 + | (opto In + ) |
| 4 | OUT 4 | (TXD RS232) | 10 | IN 3 – | (opto In –) |
| 5 | IN 1 | (0 - 24V) | 11 | OUT 3 | (open drain) |
| 6 | IN 2 | (0 - 24V) | 12 | OUT 0 | (open drain) |