Allied Vision

FXO 10GigE

fxo546MXGE



General

Model	fxo546MXGE
Product code	F002152
Product series	FXO 10GigE
Status	Available

Sensor

Sensor type	Area scan
Chroma	Mono
Spectrum	Visible
Spectral range	400 nm to 1000 nm
Resolution	2,840 × 2,840 (8.10 MP)
Sensor model	Sony IMX546
Sensor architecture (material)	cmos
Shutter type(s)	Global shutter (GS)
Sensor size	7.78 × 7.78 mm (11 mm, Type 2/3)
Pixel size	2.74 µm × 2.74 µm

Pixel formats

Sensor bit depth	12-bit, 8-bit
Monochrome pixel formats	mono12, mono8

Timing and gain

Max. frame rate	88 fps
Exposure time	6 µs to 60 s
Gain	0.0 dB to 48.0 dB

I/Os and power

Non-isolated lines	0 x LVDS input, 0 x LVDS output, 0 x TTL input, 0 x TTL output, 2 x 24V input, 4 x Open drain output,
Specific non-isolated lines	1 x RS232 input, 1 x RS232 output, 0 x RS422 input, 0 x RS422 output,
Opto-isolated lines	1 x Optical isolated input, 0 x Optical isolated input,
I/O connector	12-pin Hirose HR10A-10P-12S
Power supply	10 to 25VDC, Power over Ethernet
Power consumption	External: 9 W (typical)

Operating conditions

Operating temperature	-10 °C to 60 °C (housing)
Humidity	10 % to 90 % (non-condensing)

Mechanical properties

Body dimensions (L x W x H in mm)	76 × 50 × 50
Filter/protection glass	K9 - AR coating - 400-850nm
IP class	IP30
Lens mount(s)	C-Mount
Weight	240 g

On-board memory and FPGA

Image buffer (RAM)	896 MByte
Non-volatile memory (Flash)	32 MByte

Interfaces

Digital interface	10gige
Interface connector	(RJ-45)
Vision standard	GigE Vision 2.0

FW features - image control

Exposure modes	auto, external, manual
Gain modes	auto, manual
Image control features	dpc, ffc, lut, mirror-image, roi, shading-correction

FW features - camera control

Trigger modes/sync	external, internal, software

Quantum Efficiency

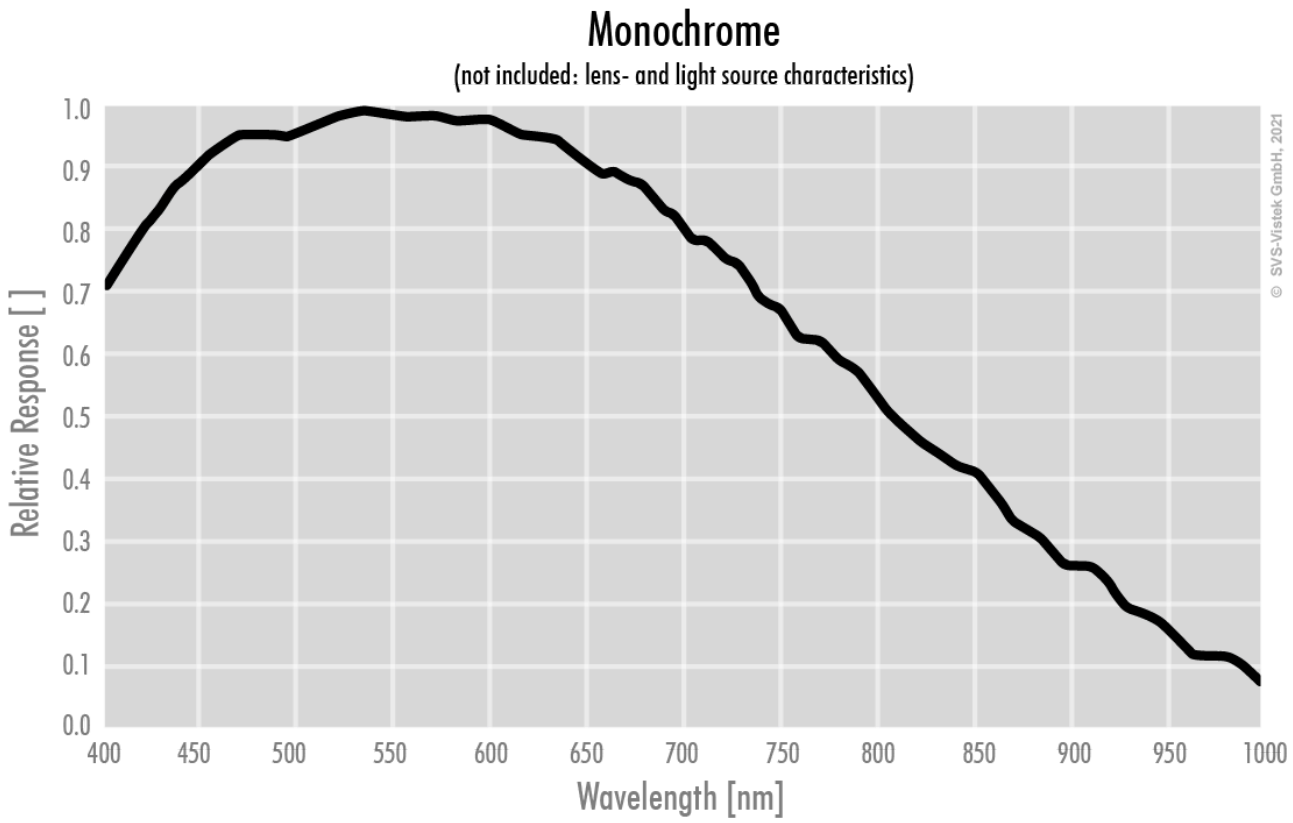

Technical Drawing

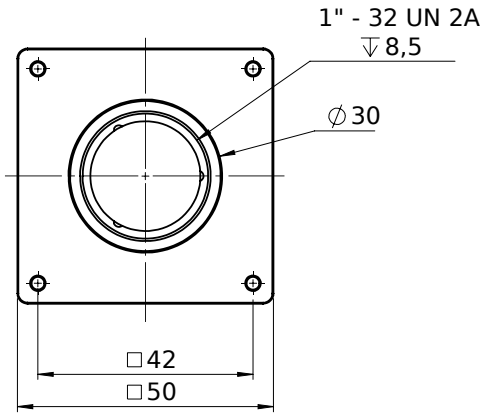

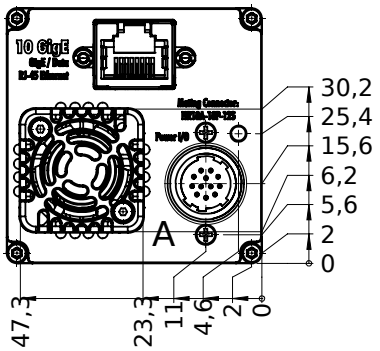

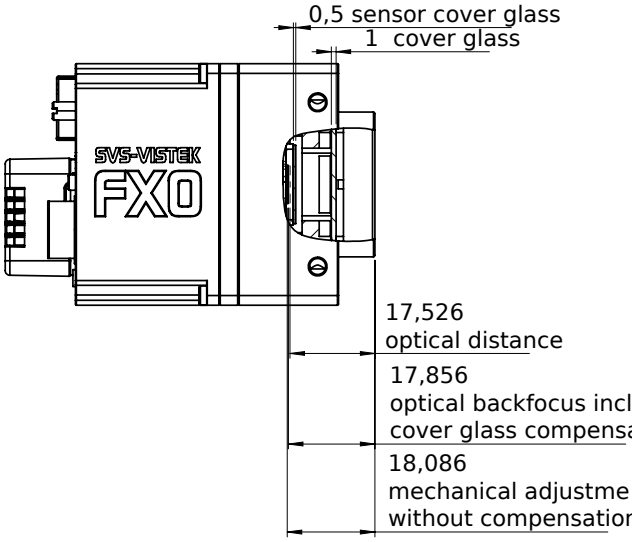

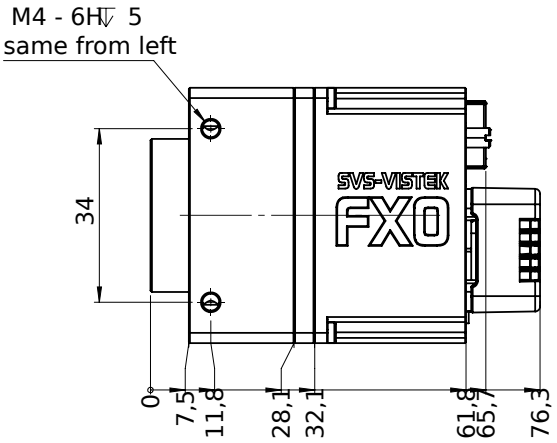

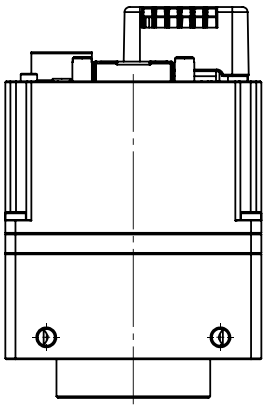

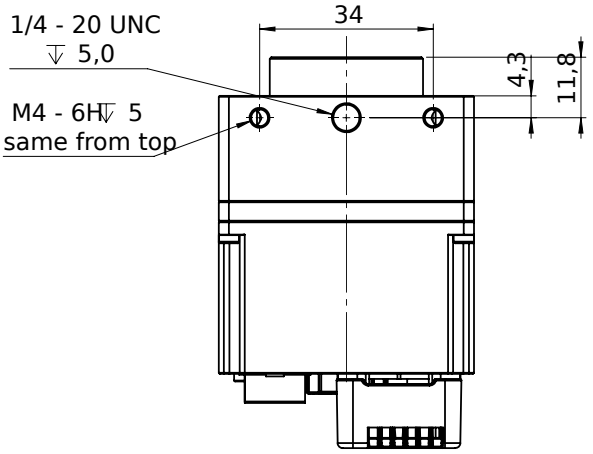

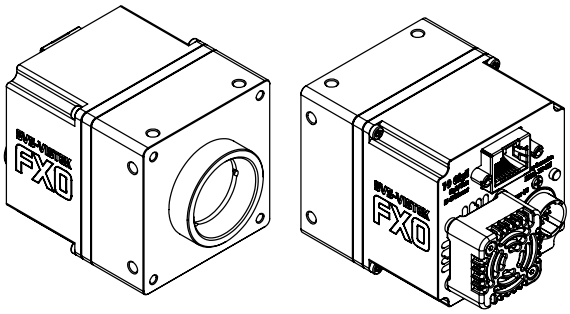

I/O pin assignment

Hirose 12 Pin

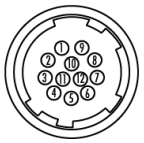

1	VIN –	(GND)	7	OUT 1	(open drain)
2	VIN +	(10 V to 25 V DC)	8	OUT 2	(open drain)
3	IN 4	(RXD RS232)	9	IN 3 +	(opto In +)
4	OUT 4	(TXD RS232)	10	IN 3 –	(opto In –)
5	IN 1	(0 - 24V)	11	OUT 3	(open drain)
6	IN 2	(0 - 24V)	12	OUT 0	(open drain)