Allied Vision

FXO 10GigE

fxo542MXGE



General

Model	fxo542MXGE
Product code	F002094
Product series	FXO 10GigE
Status	Available

Sensor

Sensor type	Area scan
Chroma	Mono
Spectrum	Visible
Spectral range	400 nm to 1000 nm
Resolution	5,320 × 3,032 (16.10 MP)
Sensor model	Sony IMX542
Sensor architecture (material)	cmos
Shutter type(s)	Global shutter (GS)
Sensor size	14.58 × 8.31 mm (16.78 mm, Type 1.1)
Pixel size	2.74 µm × 2.74 µm

Pixel formats

Sensor bit depth	8-bit, 12-bit
Monochrome pixel formats	mono8, mono12

Imaging performance

Dynamic range	72 dB
SNR	39.15 dB

Allied Vision

Timing and gain

Max. frame rate	45.6 fps
Exposure time	21 µs to 60 s
Gain	0.0 dB to 48.0 dB

I/Os and power

Non-isolated lines	0 x LVDS input, 0 x LVDS output, 0 x TTL input, 0 x TTL output, 2 x 24V input, 4 x Open drain output,
Specific non-isolated lines	1 x RS232 input, 1 x RS232 output, 0 x RS422 input, 0 x RS422 output,
Opto-isolated lines	1 x Optical isolated input, 0 x Optical isolated input,
I/O connector	12-pin Hirose HR10A-10P-12S
Power supply	10 to 25VDC, Power over Ethernet
Power consumption	External: 9 W (typical)

Operating conditions

Operating temperature	-10 °C to 60 °C (housing)

Mechanical properties

Body dimensions (L x W x H in mm)	76 × 50 × 50
Filter/protection glass	K9 - AR coating - 400-850nm
IP class	IP30
Lens mount(s)	C-Mount
Weight	240 g

On-board memory and FPGA

Image buffer (RAM)	896 MByte
Non-volatile memory (Flash)	32 MByte

Interfaces

Digital interface	10gige
Interface connector	(RJ-45)
Vision standard	GigE Vision 2.0

FW features - image control

Exposure modes	manual, auto, external

FW features - image control

Gain modes	auto, manual
Image control features	roi, lut, mirror-image, dpc, shading-correction, ffc

FW features - camera control

Trigger modes/sync	internal, software, external
Camera control features	PTP, User Sets, POE, PWM(4), Sequencer,

Quantum Efficiency

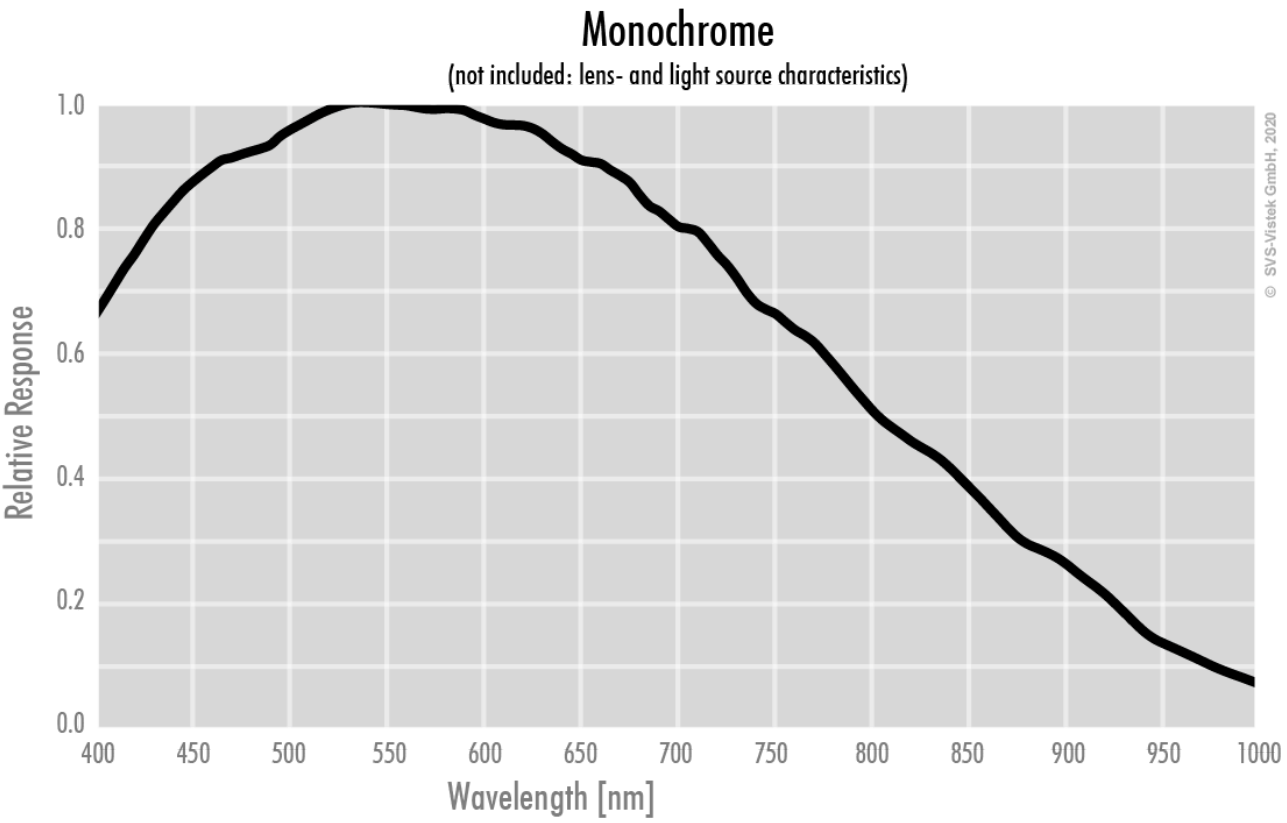

Technical Drawing

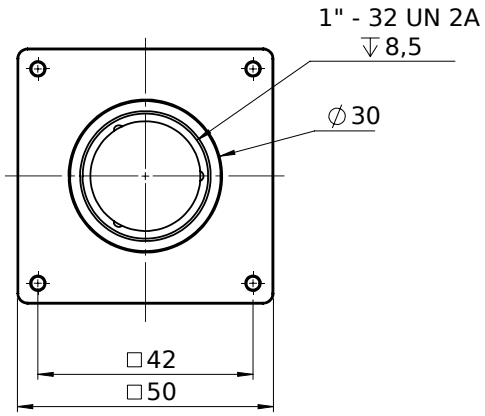

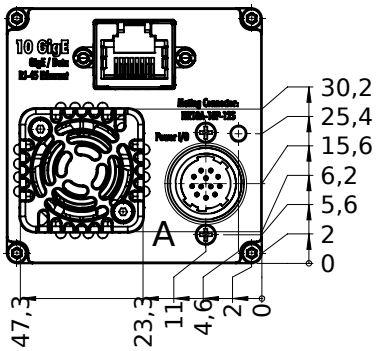

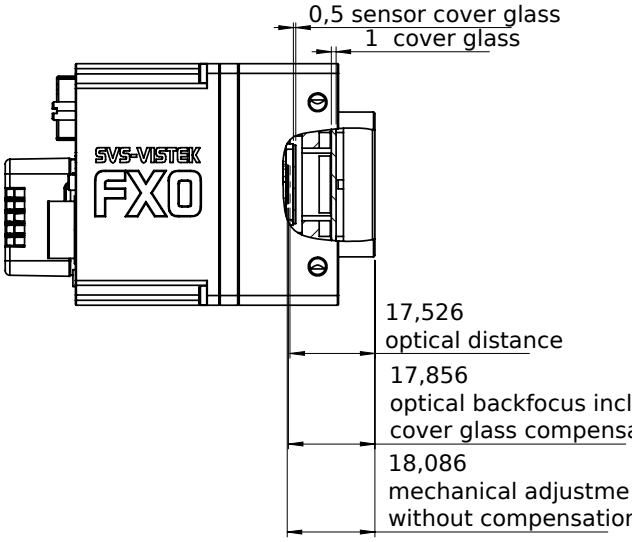

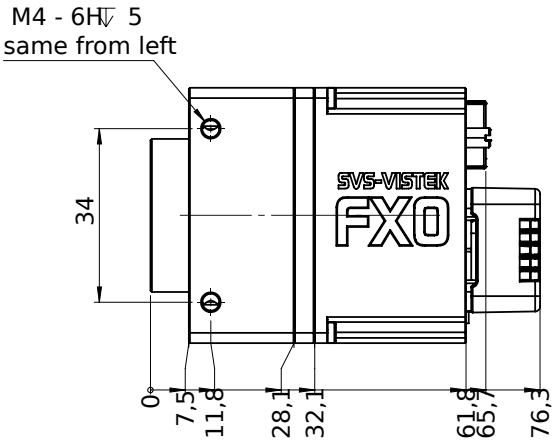

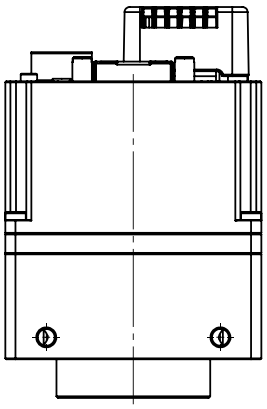

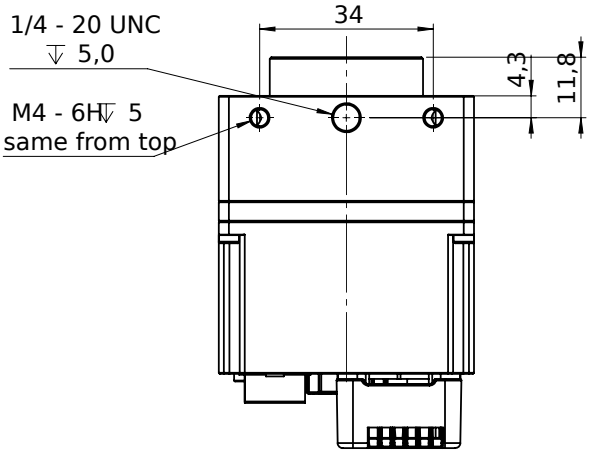

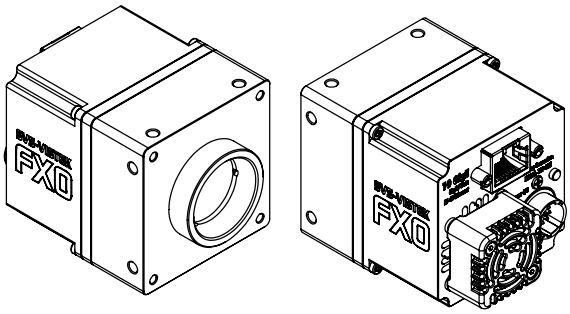

I/O pin assignment

Hirose 12 Pin

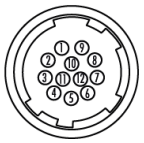

1	VIN –	(GND)	7	OUT 1	(open drain)
2	VIN +	(10 V to 25 V DC)	8	OUT 2	(open drain)
3	IN 4	(RXD RS232)	9	IN 3 +	(opto In +)
4	OUT 4	(TXD RS232)	10	IN 3 –	(opto In –)
5	IN 1	(0 - 24V)	11	OUT 3	(open drain)
6	IN 2	(0 - 24V)	12	OUT 0	(open drain)