Allied Vision

FXO 100GigE

fxo925M100GE



General

Model	fxo925M100GE
Product code	F002398
Product series	FXO 100GigE
Status	Available

Sensor

Sensor type	Area scan
Chroma	Mono
Spectrum	Visible
Spectral range	350 nm to 1000 nm
Resolution	5,312 × 4,608 (24.50 MP)
Sensor model	Sony IMX925
Sensor architecture (material)	cmos
Shutter type(s)	Global shutter (GS)
Sensor size	14.55 × 12.63 mm (19.27 mm, Type 1.2)
Pixel size	2.74 µm × 2.74 µm

Pixel formats

Sensor bit depth	10-bit, 12-bit, 8-bit
Monochrome pixel formats	mono10, mono12, mono8

Timing and gain

Max. frame rate	442.7 fps
Exposure time	4 µs to 60 s
Gain	0.0 dB to 48.0 dB

I/Os and power

Non-isolated lines	0 x LVDS input, 0 x LVDS output, 0 x TTL input, 0 x TTL output, 2 x 24V input, 2 x Open drain output,
Specific non-isolated lines	0 x RS232 input, 0 x RS232 output, 1 x RS422 input, 1 x RS422 output,
Opto-isolated lines	0 x Optical isolated input, 0 x Optical isolated input,
I/O connector	12-pin Hirose HR10A-10P-12S
Power supply	24 to 25VDC
Power consumption	External: 28 W (typical)

Operating conditions

Operating temperature	-10 °C to 60 °C (housing)
Humidity	10 % to 90 % (non-condensing)

Mechanical properties

Body dimensions (L x W x H in mm)	101 × 58 × 58
Filter/protection glass	K9 - AR coating - 400-850nm
IP class	IP30
Lens mount(s)	C-Mount
Weight	450 g

On-board memory and FPGA

Image buffer (RAM)	4032 MByte
Non-volatile memory (Flash)	32768 MByte

Interfaces

Digital interface	100gige
Interface connector	(QSFP28)
Vision standard	GigE Vision 3.0

FW features - image control

Exposure modes	auto, external, manual
Gain modes	auto, manual
Image control features	dpc, ffc, lut, mirror-image, piv-mode, roi, shading-correction

Allied Vision

Quantum Efficiency

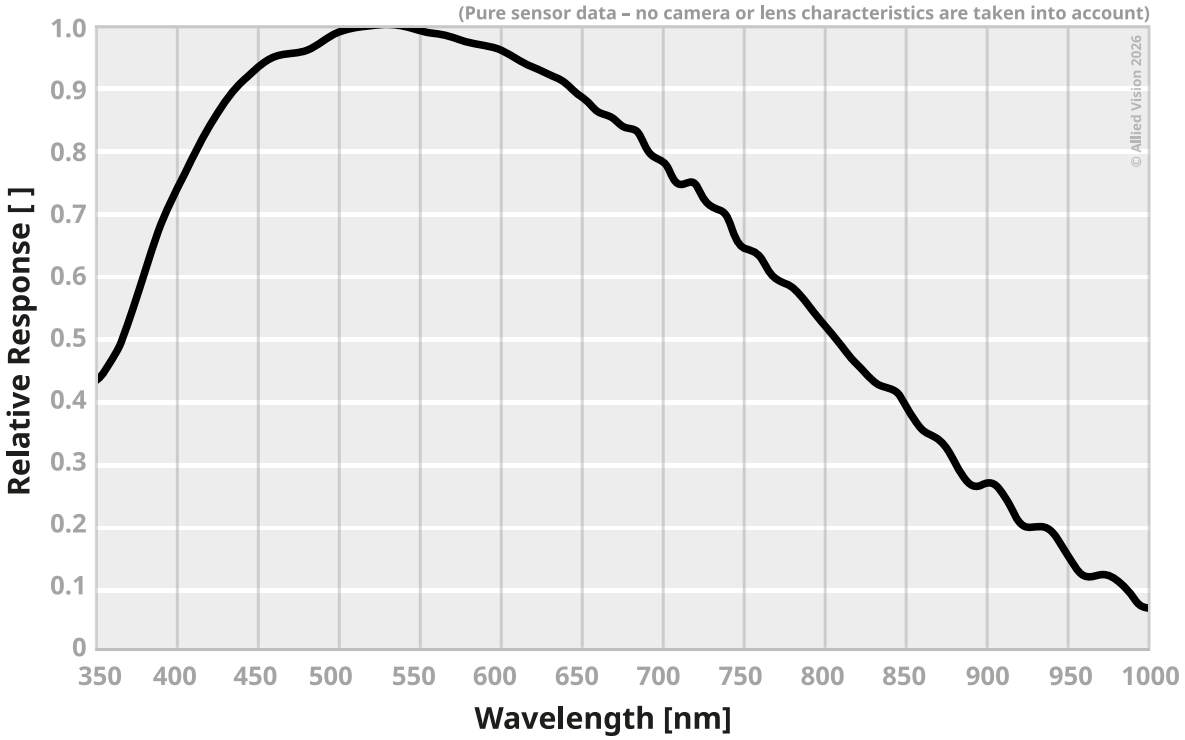

Technical Drawing

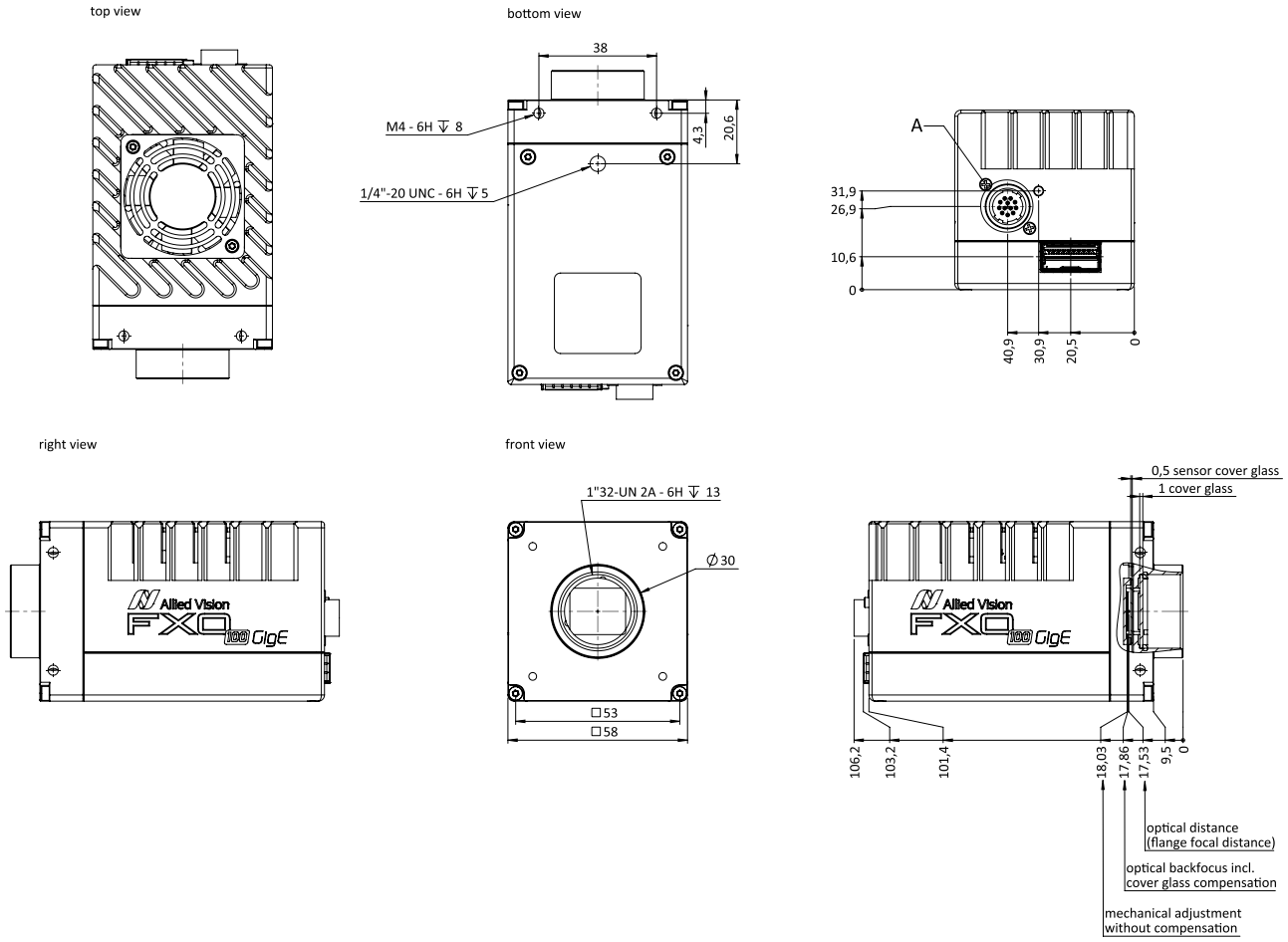

I/O pin assignment

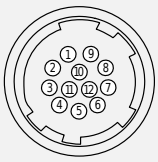

1	VIn- (GND)
2	VIn+ (24 V DC)
3	In 4 (RxD RS232)
4	Out 4 (TxD RS232)
5	In 1 (0 ... 24 V)
6	In 2 (0 ... 24 V)
7	Out 1 (open drain)
8	Out 2 (open drain)
9	In 3+(opto In+)
10	In 3- (opto In-)
11	Out 3 (open drain)
12	Out 0 (open drain)