Allied Vision

FXO SWIR

fxo992MCX

General

Model	fxo992MCX
Product code	F002339
Product series	FXO SWIR
Status	Available

Sensor

Sensor type	Area scan
Chroma	Mono
Spectrum	SWIR, Visible SWIR
Spectral range	400 nm to 1700 nm
Resolution	2,560 × 2,048 (5.20 MP)
Sensor model	Sony IMX992 | InGaAs
Sensor architecture (material)	cmos
Shutter type(s)	Global shutter (GS)
Sensor size	8.83 × 7.07 mm (11.31 mm, Type 1/1.4)
Pixel size	3.45 µm × 3.45 µm

Pixel formats

Sensor bit depth	10-bit, 12-bit, 8-bit
Monochrome pixel formats	mono10, mono12, mono8

Timing and gain

Max. frame rate	132.6 fps
Gain	0.0 dB to 42.0 dB

I/Os and power

Non-isolated lines	0 x LVDS input, 0 x LVDS output, 0 x TTL input, 0 x TTL output, 2 x 24V input, 4 x Open drain output,
Specific non-isolated lines	1 x RS232 input, 1 x RS232 output, 0 x RS422 input, 0 x RS422 output,
Opto-isolated lines	1 x Optical isolated input, 0 x Optical isolated input,

I/Os and power

I/O connector	12-pin Hirose HR10A-10P-12S
Power supply	10 to 25VDC
Power consumption	External: 7 W (typical)

Operating conditions

Operating temperature	-10 °C to 60 °C (housing)
Humidity	10 % to 90 % (non-condensing)

Mechanical properties

Body dimensions (L x W x H in mm)	70 × 50 × 50
IP class	IP30
Lens mount(s)	C-Mount
Weight	240 g

On-board memory and FPGA

Non-volatile memory (Flash)	32000 MByte

Interfaces

Digital interface	cxp-12 with 1 connection
Interface connector	(micro-BNC)
Vision standard	CoaXPress 2.0

FW features - image control

Exposure modes	auto, manual
Gain modes	auto, manual
Image control features	dopo, dpc, ffc, lut, mirror-image, nuc, roi

FW features - camera control

Trigger modes/sync	external, internal, software

Quantum Efficiency

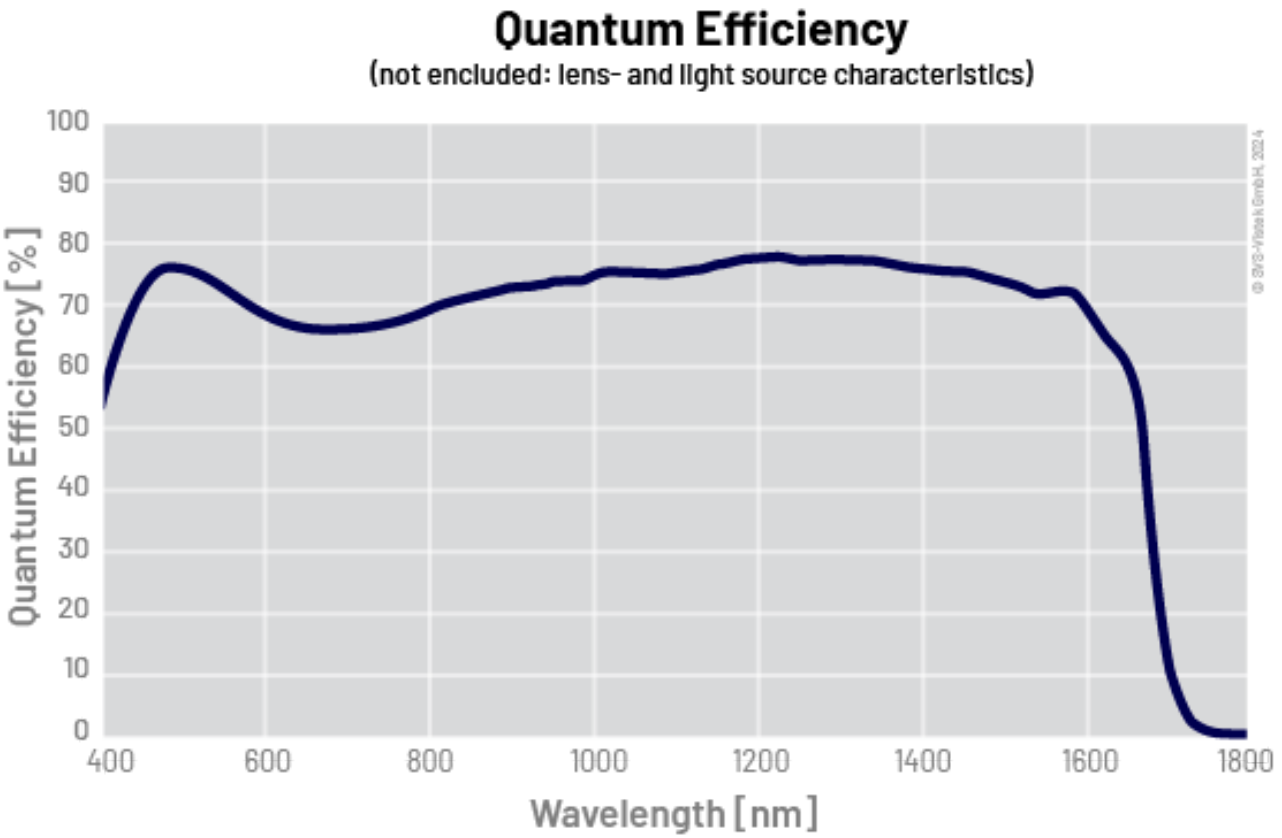

Allied Vision

Technical Drawing

front

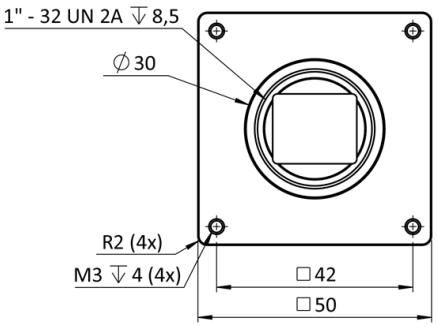

back

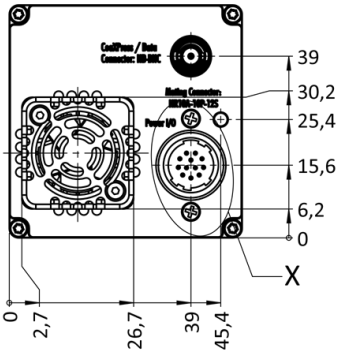

cross section

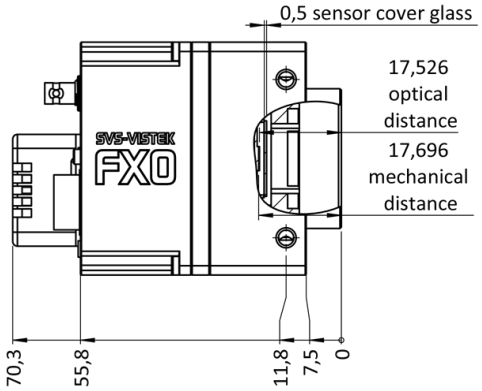

right side

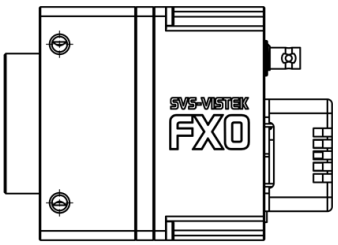

top

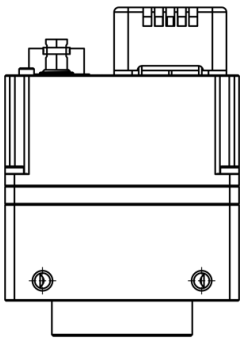

bottom

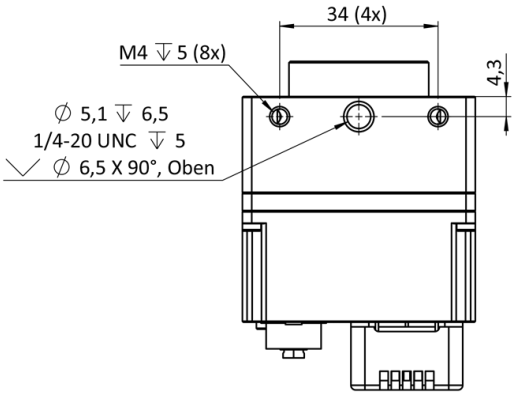

3D

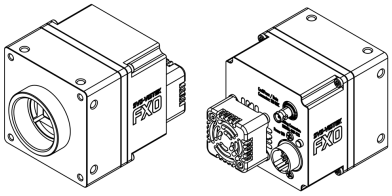

I/O pin assignment

Hirose 12 Pin

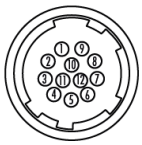

1	VIN –	(GND)	7	OUT 1	(open drain)
2	VIN +	(10 V to 25 V DC)	8	OUT 2	(open drain)
3	IN 4	(RXD RS232)	9	IN 3 +	(opto In +)
4	OUT 4	(TXD RS232)	10	IN 3 –	(opto In –)
5	IN 1	(0 - 24V)	11	OUT 3	(open drain)
6	IN 2	(0 - 24V)	12	OUT 0	(open drain)