Allied Vision

EXO GigE

exo547CGE



General

Model	exo547CGE
Product code	F002175
Product series	EXO GigE
Status	Available

Sensor

Sensor type	Area scan
Chroma	Color
Spectrum	Visible
Spectral range	400 nm to 1000 nm
Resolution	2,448 × 2,048 (5.00 MP)
Sensor model	Sony IMX547
Sensor architecture (material)	cmos
Shutter type(s)	Global shutter (GS)
Sensor size	6.71 × 5.61 mm (8.75 mm, Type 1/1.8)
Pixel size	2.74 µm × 2.74 µm

Pixel formats

Sensor bit depth	8-bit, 12-bit
RGB pixel formats	bayer8, bayer12packed

Imaging performance

Dynamic range	72 dB
SNR	39 dB

Allied Vision

Timing and gain

Max. frame rate	24.5 fps
Exposure time	28 µs to 60 s
Gain	0.0 dB to 48.0 dB

I/Os and power

Non-isolated lines	0 x LVDS input, 0 x LVDS output, 0 x TTL input, 0 x TTL output, 2 x 24V input, 4 x Open drain output,
Specific non-isolated lines	1 x RS232 input, 1 x RS232 output, 0 x RS422 input, 0 x RS422 output,
Opto-isolated lines	1 x Optical isolated input, 0 x Optical isolated input,
I/O connector	12-pin Hirose HR10A-10P-12S
Power supply	10 to 25VDC, Power over Ethernet
Power consumption	External: 4.5 W (typical)

Operating conditions

Operating temperature	-10 °C to 60 °C (housing)

Mechanical properties

Body dimensions (L x W x H in mm)	43 × 50 × 50
Filter/protection glass	IR-Cut - 680nm
IP class	IP40
Lens mount(s)	C-Mount
Weight	143 g

On-board memory and FPGA

Image buffer (RAM)	192 MByte
Non-volatile memory (Flash)	32 MByte

Interfaces

Digital interface	gige
Interface connector	(RJ-45)
Vision standard	GigE Vision

FW features - image control

Exposure modes	manual, auto, external

FW features - image control

Gain modes	auto, manual
White balance modes	auto, manual
Image control features	roi, lut, color-transformation, mirror-image, dpc, shading-correction, ffc

FW features - camera control

Trigger modes/sync	internal, software, external
Camera control features	PTP, User Sets, POE, PWM(4), Sequencer,

Quantum Efficiency

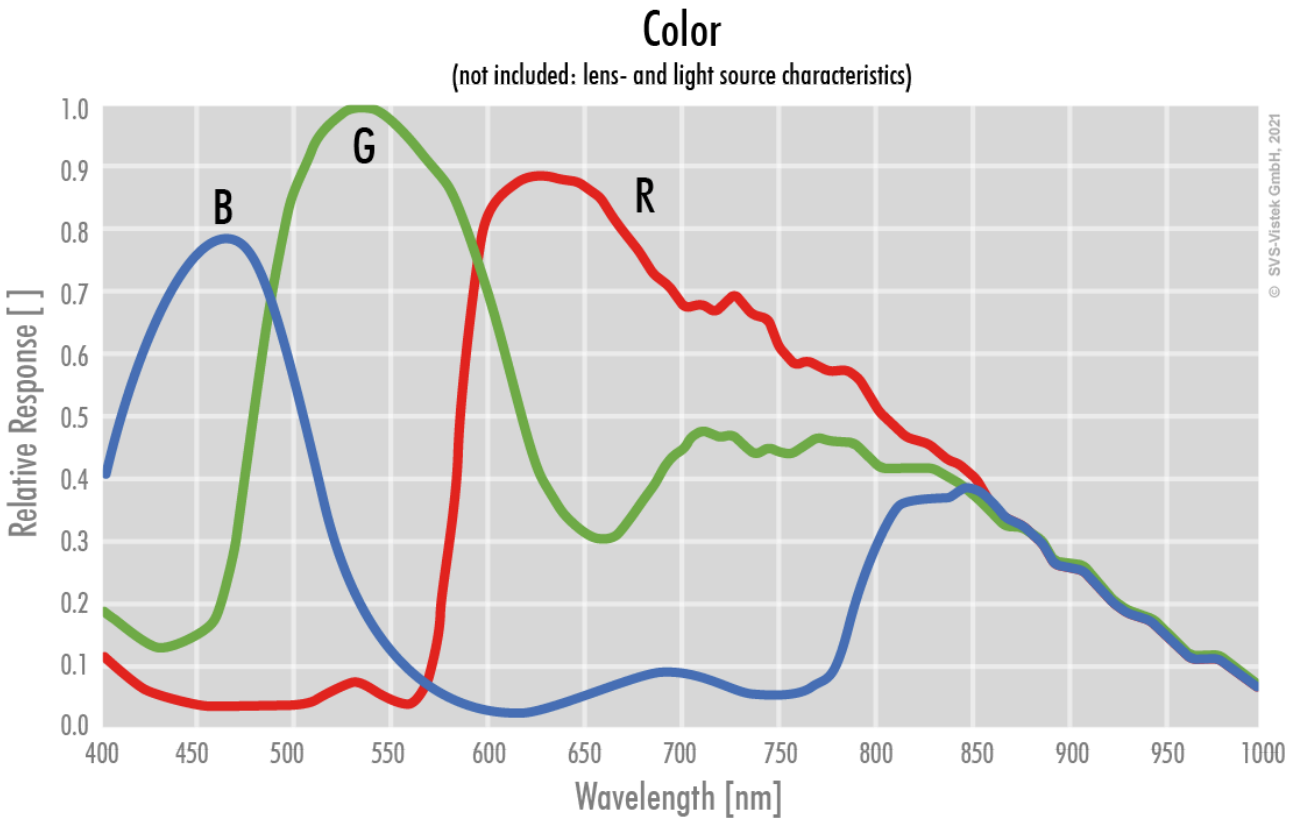

Allied Vision

Technical Drawing

front

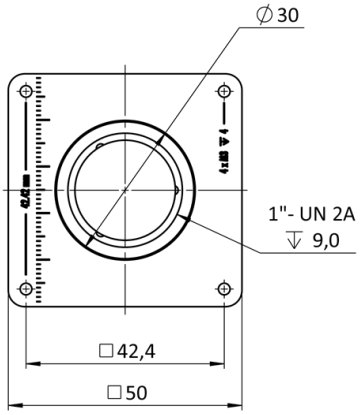

back

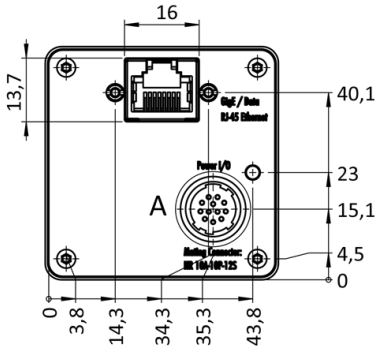

cross section

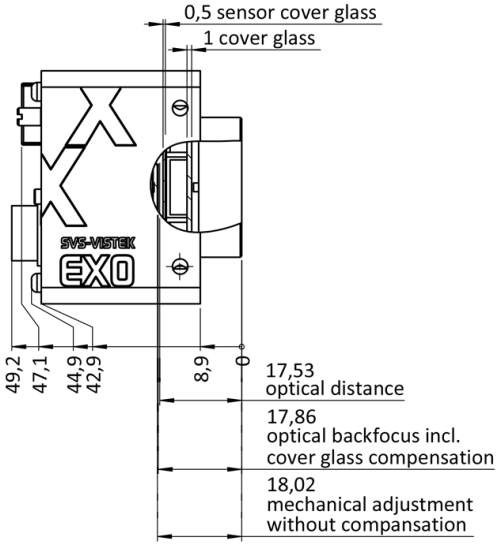

right side

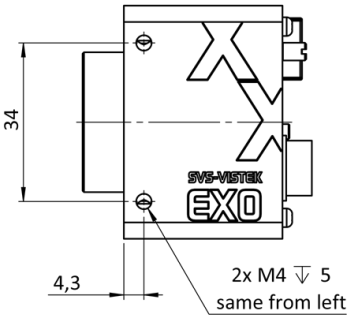

top

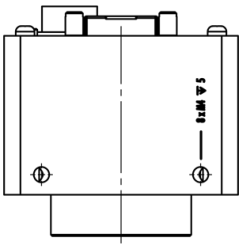

bottom

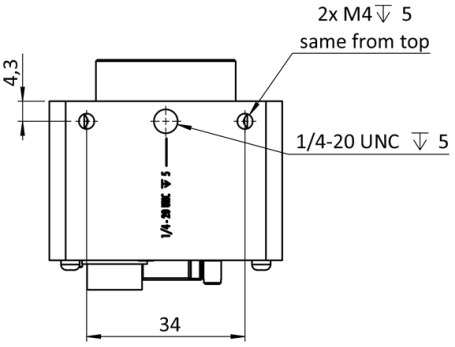

3D

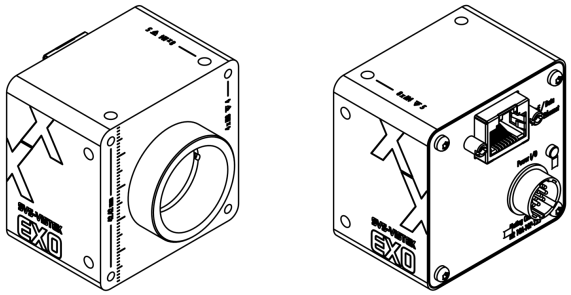

I/O pin assignment

Hirose 12 Pin

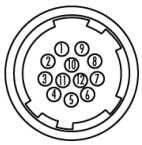

1	VIN –	(GND)
2	VIN +	(10 V to 25 V DC)
3	IN 4	(RXD RS232)
4	OUT 4	(TXD RS232)
5	IN 1	(0 - 24V)
6	IN 2	(0 - 24V)
7	OUT 1	(open drain)
8	OUT 2	(open drain)
9	IN 3 +	(opto In +)
10	IN 3 –	(opto In –)
11	OUT 3	(open drain)
12	OUT 0	(open drain)