Allied Vision

# EXO Camera Link

## exo174MCL



## General

| | |
|---|---|
| Model | exo174MCL |
| Product code | F001593 |
| Product series | EXO Camera Link |
| Status | Discontinued |

## Sensor

| | |
|---|---|
| Sensor type | Area scan |
| Chroma | Mono |
| Spectrum | Visible |
| Spectral range | 400 nm to 1000 nm |
| Resolution | 1,920 × 1,200 (2.30 MP) |
| Sensor model | Sony IMX174 |
| Sensor architecture (material) | cmos |
| Shutter type(s) | Global shutter (GS) |
| Sensor size | 11.25 × 7.03 mm (13.27 mm, Type 1/1.2) |
| Pixel size | 5.86 µm × 5.86 µm |

## Pixel formats

| | |
|---|---|
| Sensor bit depth | 8-bit, 12-bit |
| Monochrome pixel formats | mono8, mono12 |

## Imaging performance

| | |
|---|---|
| Dynamic range | 72 dB |
| SNR | 44 dB |

Allied Vision

## Timing and gain

| | |
|---|---|
| Max. frame rate | 105 fps |
| Exposure time | 25 µs to 60 s |
| Gain | 0.0 dB to 18.0 dB |

## I/Os and power

| | |
|---|---|
| Non-isolated lines | 0 x LVDS input, 0 x LVDS output, 0 x TTL input, 0 x TTL output, 2 x 24V input, 4 x Open drain output, |
| Specific non-isolated lines | 1 x RS232 input, 1 x RS232 output, 0 x RS422 input, 0 x RS422 output, |
| Opto-isolated lines | 1 x Optical isolated input, 0 x Optical isolated input, |
| I/O connector | 12-pin Hirose HR10A-10P-12S |
| Power supply | 10 to 25VDC |
| Power consumption | External: 4 W (typical) |

## Operating conditions

| | |
|---|---|
| Operating temperature | -10 °C to 60 °C (housing) |

## Mechanical properties

| | |
|---|---|
| Body dimensions (L x W x H in mm) | 43 × 50 × 50 |
| Filter/protection glass | K9 - AR coating - 400-850nm |
| IP class | IP40 |
| Lens mount(s) | C-Mount |
| Weight | 138 g |

## On-board memory and FPGA

| | |
|---|---|
| Image buffer (RAM) | 192 MByte |
| Non-volatile memory (Flash) | 32 MByte |

## Interfaces

| | |
|---|---|
| Digital interface | Camera Link Base |
| Interface connector | (MDR) |

## FW features - image control

| | |
|---|---|
| Exposure modes | manual, auto, external |
| Gain modes | auto, manual |

## FW features - image control

| | |
|---|---|
| Image control features | roi, lut, mirror-image |

## FW features - camera control

| | |
|---|---|
| Trigger modes/sync | internal, software, external |
| Camera control features | User Sets, PWM(4), Sequencer, |

## Quantum Efficiency

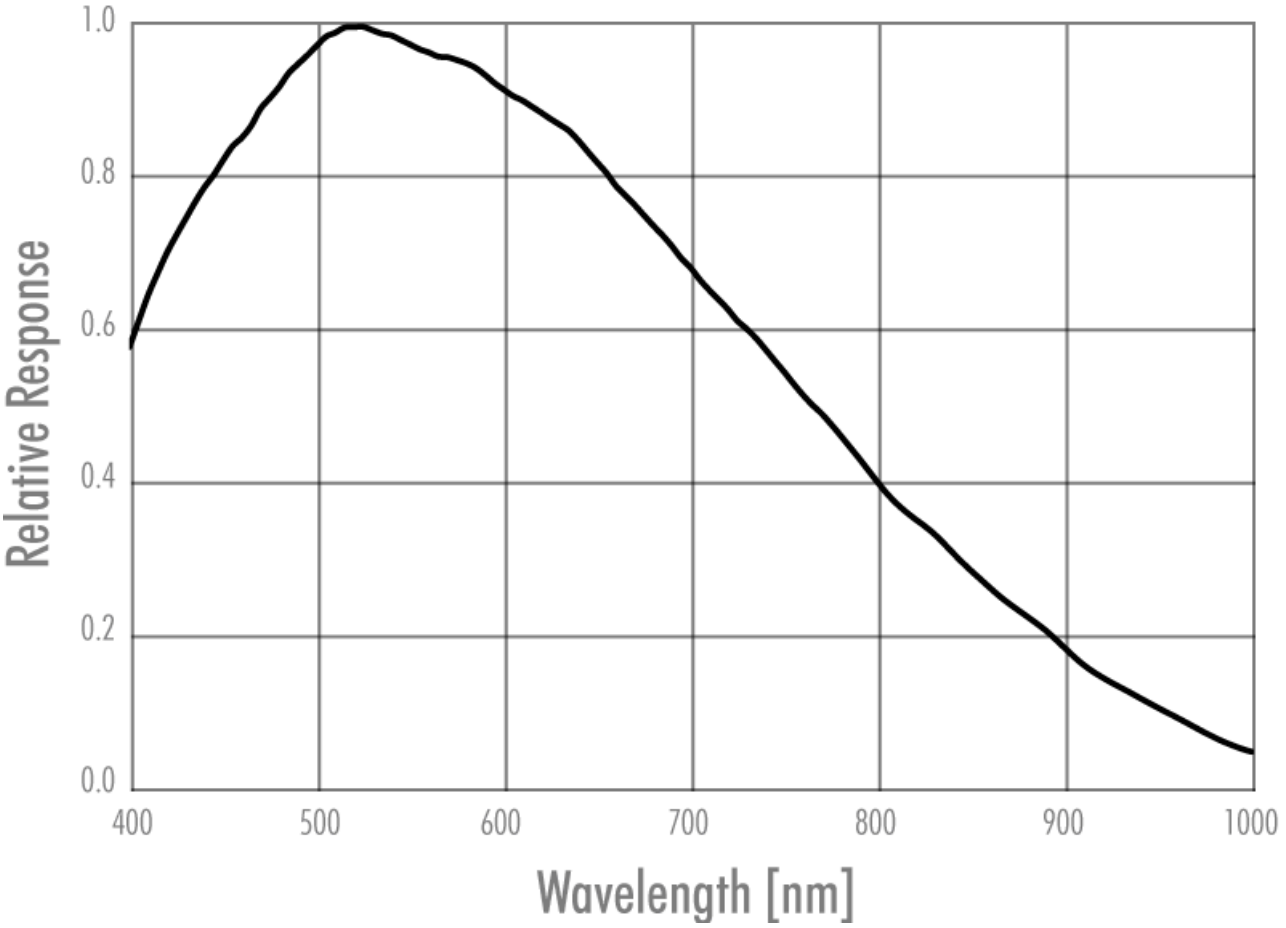

# Technical Drawing

## front

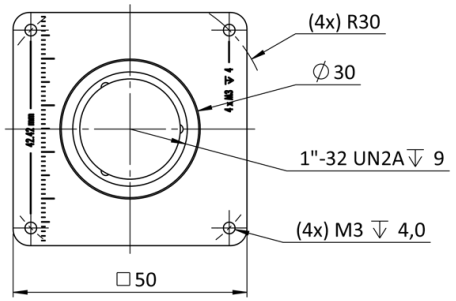


## back

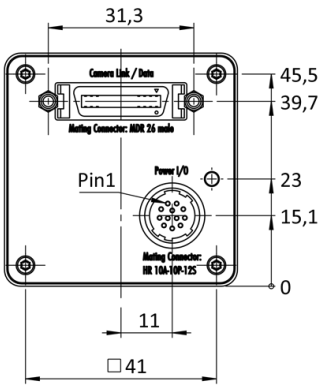


## cross section

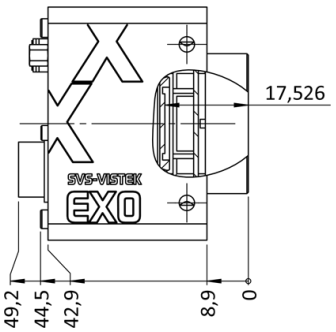


## right side

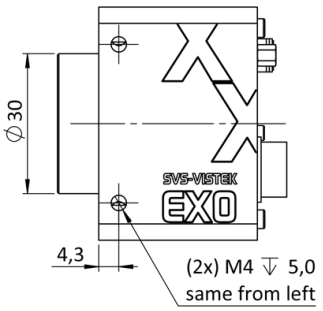

top

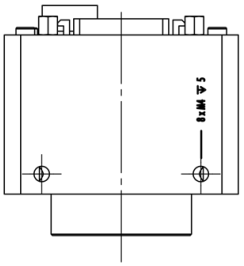

bottom

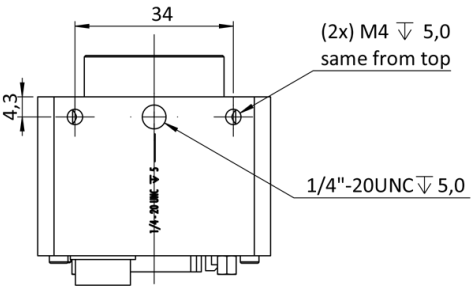


3D

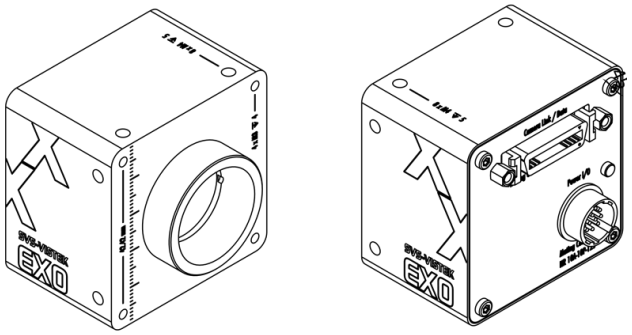

## I/O pin assignment

Hirose 12 Pin

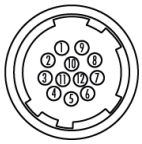

| | | | | | |
|---|---|---|---|---|---|
| 1 | VIN – | (GND) | 7 | OUT 1 | (open drain) |
| 2 | VIN + | (10 V to 25 V DC) | 8 | OUT 2 | (open drain) |
| 3 | IN 4 | (RXD RS232) | 9 | IN 3 + | (opto In +) |
| 4 | OUT 4 | (TXD RS232) | 10 | IN 3 – | (opto In –) |
| 5 | IN 1 | (0 - 24V) | 11 | OUT 3 | (open drain) |
| 6 | IN 2 | (0 - 24V) | 12 | OUT 0 | (open drain) |