Allied Vision

EXO SWIR

exo990MGE

General

Model	exo990MGE
Product code	F002190
Product series	EXO SWIR
Status	Available

Sensor

Sensor type	Area scan
Chroma	Mono
Spectrum	SWIR, Visible SWIR
Spectral range	400 nm to 1700 nm
Resolution	1,280 × 1,024 (1.30 MP)
Sensor model	Sony IMX990 | InGaAs
Sensor architecture (material)	cmos
Shutter type(s)	Global shutter (GS)
Sensor size	6.4 × 5.12 mm (8.2 mm, Type 1/2)
Pixel size	5.00 µm × 5.00 µm

Pixel formats

Sensor bit depth	8-bit, 12-bit
Monochrome pixel formats	mono8, mono12

Imaging performance

Dynamic range	57 dB

Timing and gain

Max. frame rate	94.4 fps
Exposure time	15 µs to 500.00 ms
Gain	0.0 dB to 42.0 dB

Allied Vision

I/Os and power

Non-isolated lines	0 x LVDS input, 0 x LVDS output, 0 x TTL input, 0 x TTL output, 2 x 24V input, 4 x Open drain output,
Specific non-isolated lines	1 x RS232 input, 1 x RS232 output, 0 x RS422 input, 0 x RS422 output,
Opto-isolated lines	1 x Optical isolated input, 0 x Optical isolated input,
I/O connector	12-pin Hirose HR10A-10P-12S
Power supply	10 to 25VDC, Power over Ethernet
Power consumption	External: 4 W (typical)

Operating conditions

Operating temperature	-10 °C to 60 °C (housing)

Mechanical properties

Body dimensions (L x W x H in mm)	43 × 50 × 50
IP class	IP40
Lens mount(s)	C-Mount
Weight	138 g

On-board memory and FPGA

Image buffer (RAM)	192 MByte
Non-volatile memory (Flash)	32 MByte

Interfaces

Digital interface	gige
Interface connector	(RJ-45)
Vision standard	GigE Vision

FW features - image control

Exposure modes	manual, auto
Gain modes	auto, manual
Image control features	roi, lut, mirror-image, dpc, nuc, ffc

FW features - camera control

Trigger modes/sync	internal, software, external
Camera control features	User Sets, POE, PWM(4), Sequencer,

Quantum Efficiency

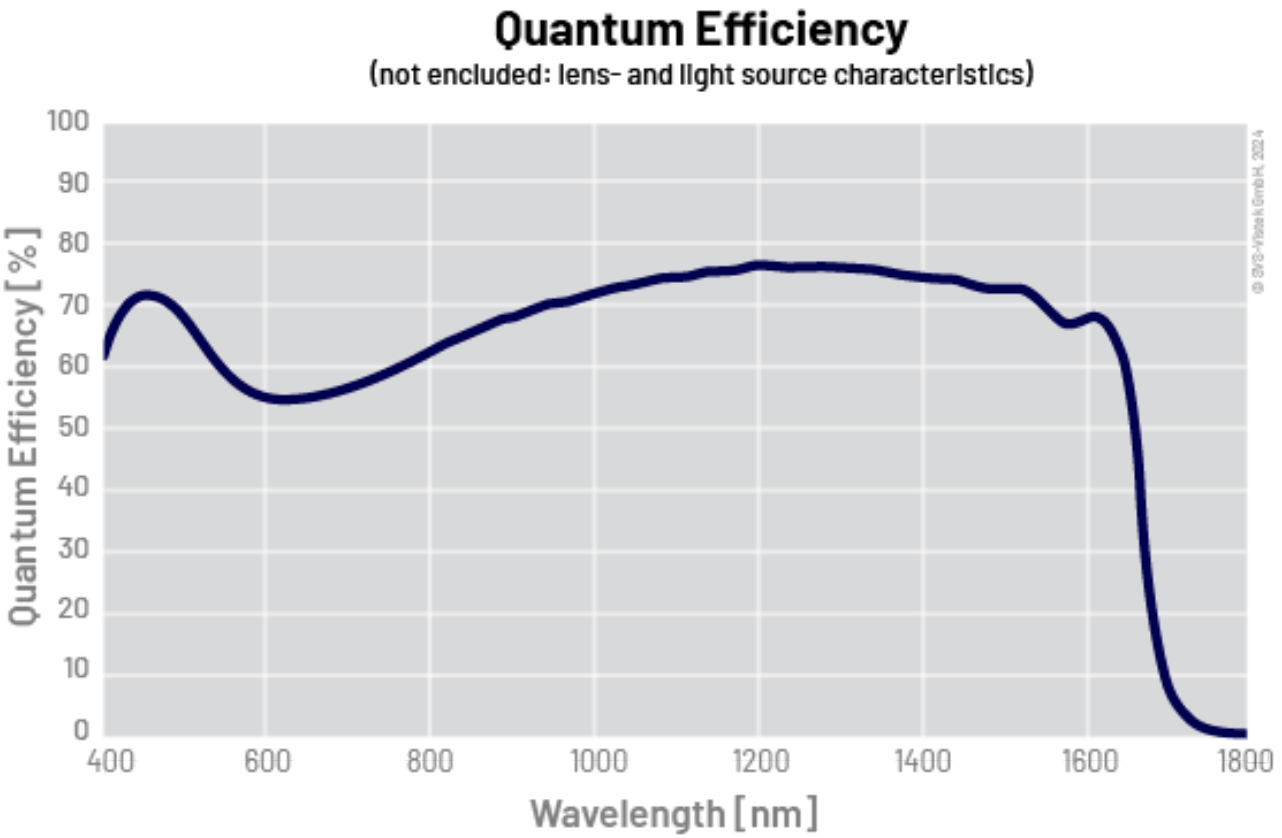

Allied Vision

Technical Drawing

front

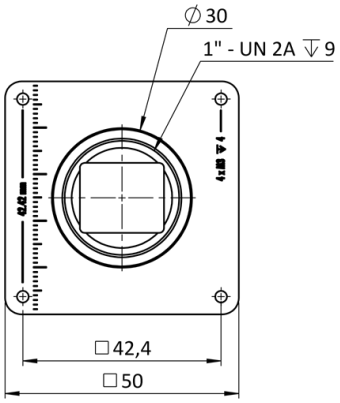

back

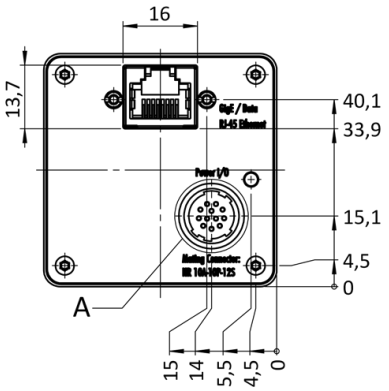

cross section

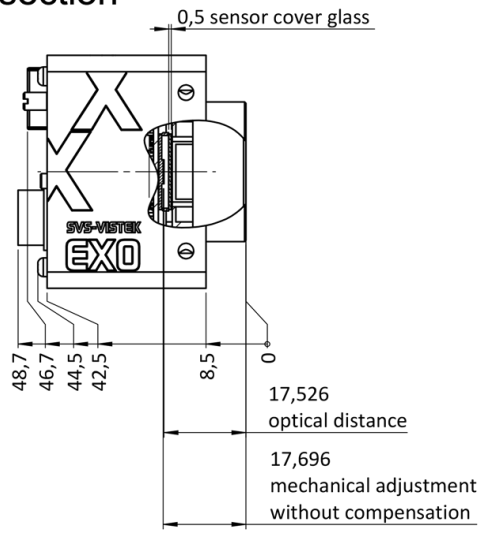

right side

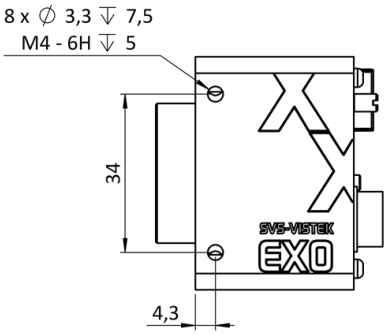

top

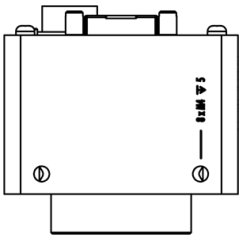

bottom

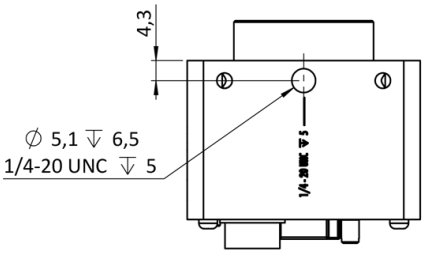

3D

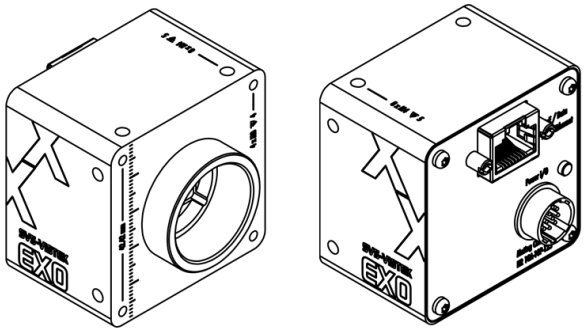

I/O pin assignment

Hirose 12 Pin

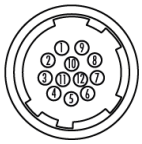

1	VIN –	(GND)	7	OUT 1	(open drain)
2	VIN +	(10 V to 25 V DC)	8	OUT 2	(open drain)
3	IN 4	(RXD RS232)	9	IN 3 +	(opto In +)
4	OUT 4	(TXD RS232)	10	IN 3 –	(opto In –)
5	IN 1	(0 - 24V)	11	OUT 3	(open drain)
6	IN 2	(0 - 24V)	12	OUT 0	(open drain)