Allied Vision

EXO Tracer

exo387MU3TR

General

Model	exo387MU3TR
Product code	F001964
Product series	EXO Tracer
Status	Discontinued

Sensor

Sensor type	Area scan
Chroma	Mono
Spectrum	Visible
Spectral range	400 nm to 1000 nm
Resolution	5,456 × 3,076 (16.80 MP)
Sensor model	Sony IMX387
Sensor architecture (material)	cmos
Shutter type(s)	Global shutter (GS)
Sensor size	18.82 × 10.61 mm (21.61 mm, Type 4/3)
Pixel size	3.45 µm × 3.45 µm

Pixel formats

Sensor bit depth	8-bit, 12-bit
Monochrome pixel formats	mono8, mono12packed

Imaging performance

Dynamic range	70.5 dB
SNR	39.9 dB

Timing and gain

Max. frame rate	22 fps
Exposure time	41 µs to 60 s
Gain	0.0 dB to 48.0 dB

I/Os and power

Non-isolated lines	0 x LVDS input, 0 x LVDS output, 0 x TTL input, 0 x TTL output, 2 x 24V input, 4 x Open drain output,
Specific non-isolated lines	1 x RS232 input, 1 x RS232 output, 0 x RS422 input, 0 x RS422 output,
Opto-isolated lines	1 x Optical isolated input, 0 x Optical isolated input,
I/O connector	12-pin Hirose HR10A-10P-12S
Power supply	10 to 25VDC
Power consumption	External: 8 W (typical)

Operating conditions

Operating temperature	-10 °C to 65 °C (housing)

Mechanical properties

Body dimensions (L x W x H in mm)	54 × 58 × 58
Filter/protection glass	K9 - AR coating
IP class	IP40
Lens mount(s)	MFT
Weight	320 g

On-board memory and FPGA

Image buffer (RAM)	192 MByte
Non-volatile memory (Flash)	32 MByte

Interfaces

Digital interface	usb3.0
Interface connector	(Micro-B)
Vision standard	USB3 Vision

FW features - image control

Exposure modes	manual, auto, external
Gain modes	auto, manual
Image control features	roi, lut, mirror-image, dpc, shading-correction

FW features - camera control

Trigger modes/sync	internal, software, external

FW features - camera control

Camera control features	User Sets, PWM(4), Sequencer,

Quantum Efficiency

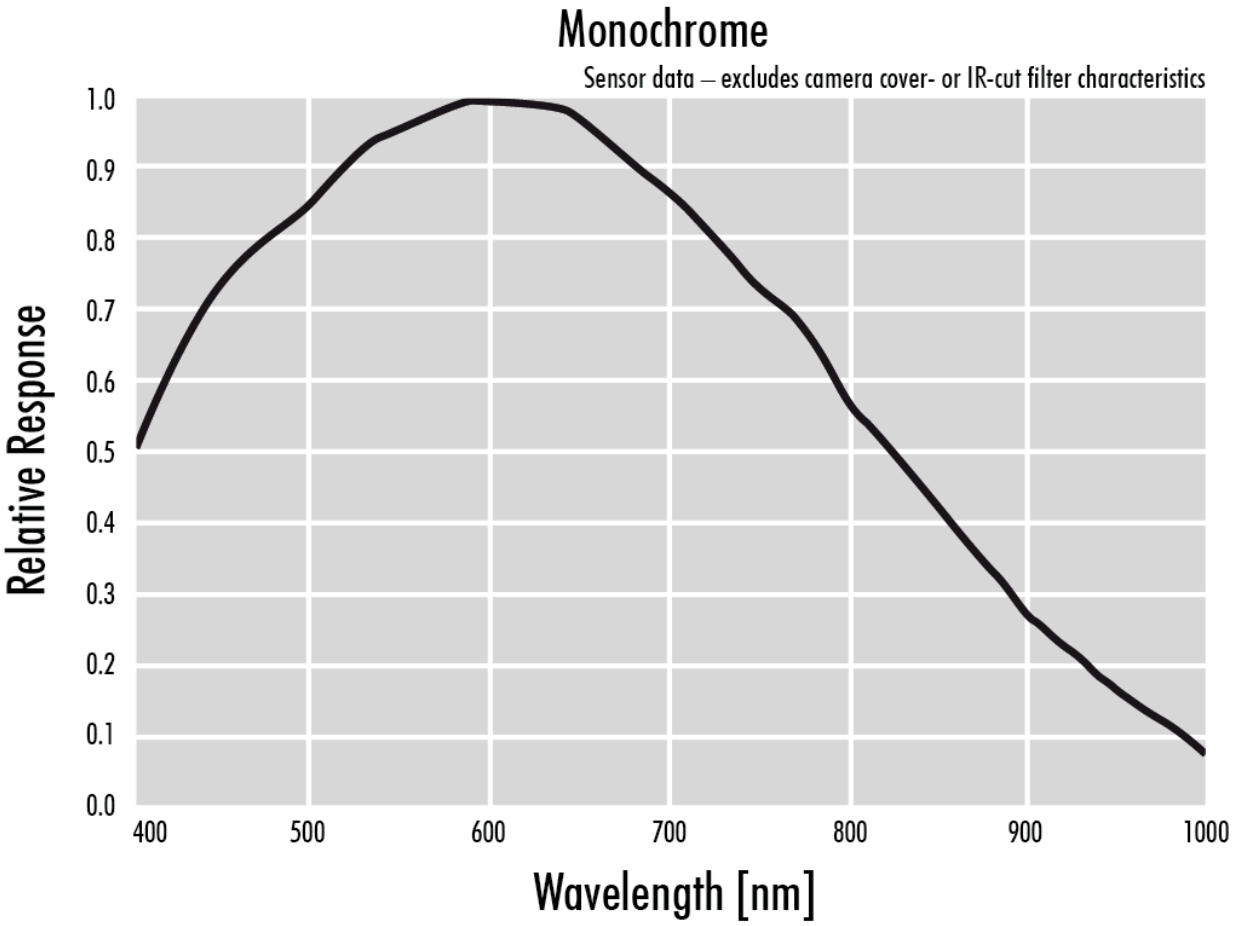

Technical Drawing

front

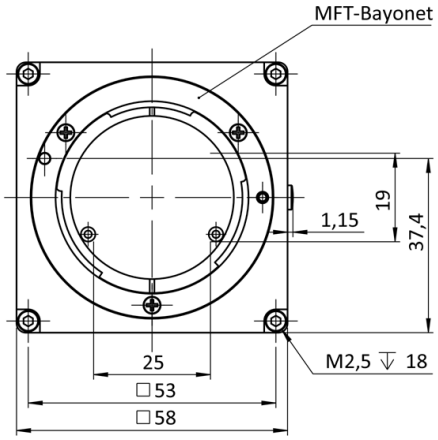

back

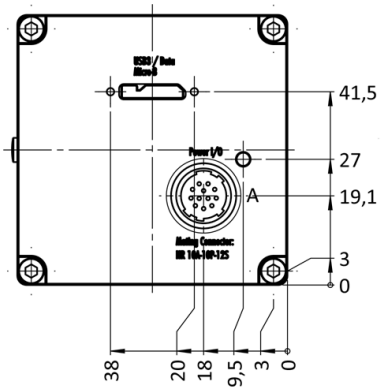

cross section

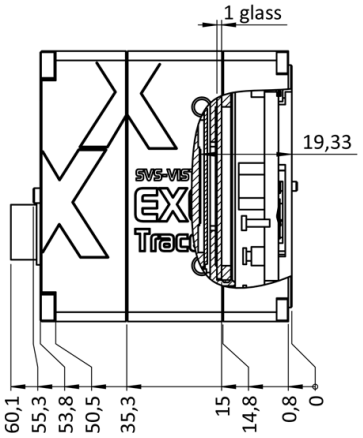

right side

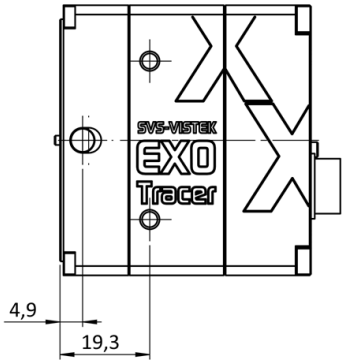

top

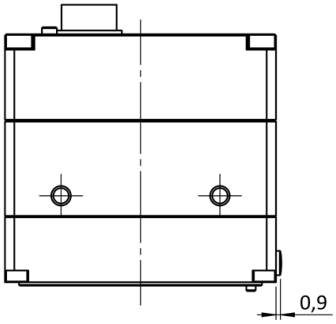

bottom

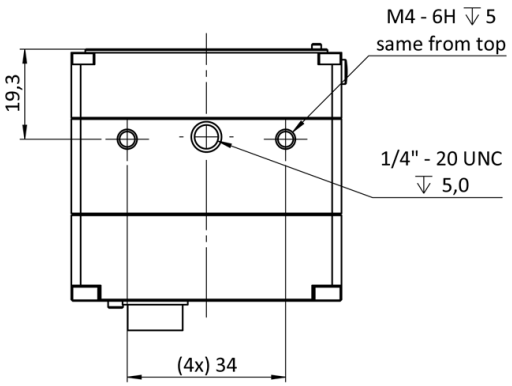

3D

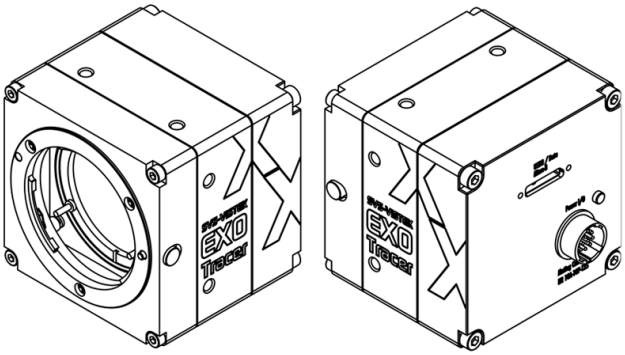

I/O pin assignment

Hirose 12 Pin

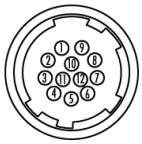

1	VIN –	(GND)	7	OUT 1	(open drain)
2	VIN +	(10 V to 25 V DC)	8	OUT 2	(open drain)
3	IN 4	(RXD RS232)	9	IN 3 +	(opto In +)
4	OUT 4	(TXD RS232)	10	IN 3 –	(opto In –)
5	IN 1	(0 - 24V)	11	OUT 3	(open drain)
6	IN 2	(0 - 24V)	12	OUT 0	(open drain)