Allied Vision



EoSens CoaXPress-12

EoSens1.1MCX12-CM

General

Model	EoSens1.1MCX12-CM
Product code	F006001
Product series	EoSens CoaXPress-12
Status	Available

Sensor

Sensor type	Area scan
Chroma	Mono
Spectrum	Visible
Spectral range	400 nm to 1000 nm
Resolution	1,280 × 864 (1.10 MP)
Sensor model	Luxima LUX13HS
Sensor architecture (material)	cmos
Shutter type(s)	Global shutter (GS)
Sensor size	17.54 × 11.84 mm (21.16 mm, Type 4/3)
Pixel size	13.70 µm × 13.70 µm

Pixel formats

Sensor bit depth	8-bit, 10-bit
Monochrome pixel formats	mono8, mono10

Timing and gain

Max. frame rate	3674 fps
Max. frame rate ROI modes	1280 x 864 | 3674 fps, 1280 x 768 | 4151 fps, 640 x 480 | 6576 fps, 128 x 128 | 23821 fps, x | 224673 fps,
Exposure time	2 µs to 1 s
Gain	0.0 dB to 18.0 dB

I/Os and power

Non-isolated lines	0 x LVDS input, 0 x LVDS output, 0 x TTL input, 0 x TTL output, 2 x 24V input, 0 x Open drain output,
Specific non-isolated lines	0 x RS232 input, 0 x RS232 output, 0 x RS422 input, 0 x RS422 output,
Opto-isolated lines	0 x Optical isolated input, 0 x Optical isolated input,
I/O connector	12-pin Hirose HR10A-10P-12S
Power supply	12 to 24VDC, Power over CoaXPress
Power consumption	External: 14 W (typical)

Operating conditions

Operating temperature	-10 °C to 45 °C (ambient, without condensation)

Mechanical properties

Body dimensions (L x W x H in mm)	54 × 80 × 80
IP class	IP30
Lens mount(s)	C-Mount
Weight	500 g

Interfaces

Digital interface	cxp-12 with 4 connections
Interface connector	(micro-BNC)
Vision standard	CoaXPress 2.0

FW features - image control

Exposure modes	external
Gain modes	digital, analog
White balance modes	true
Image control features	roi, mirror-image

FW features - camera control

Trigger modes/sync	external, trigger-over-cxp

Quantum Efficiency

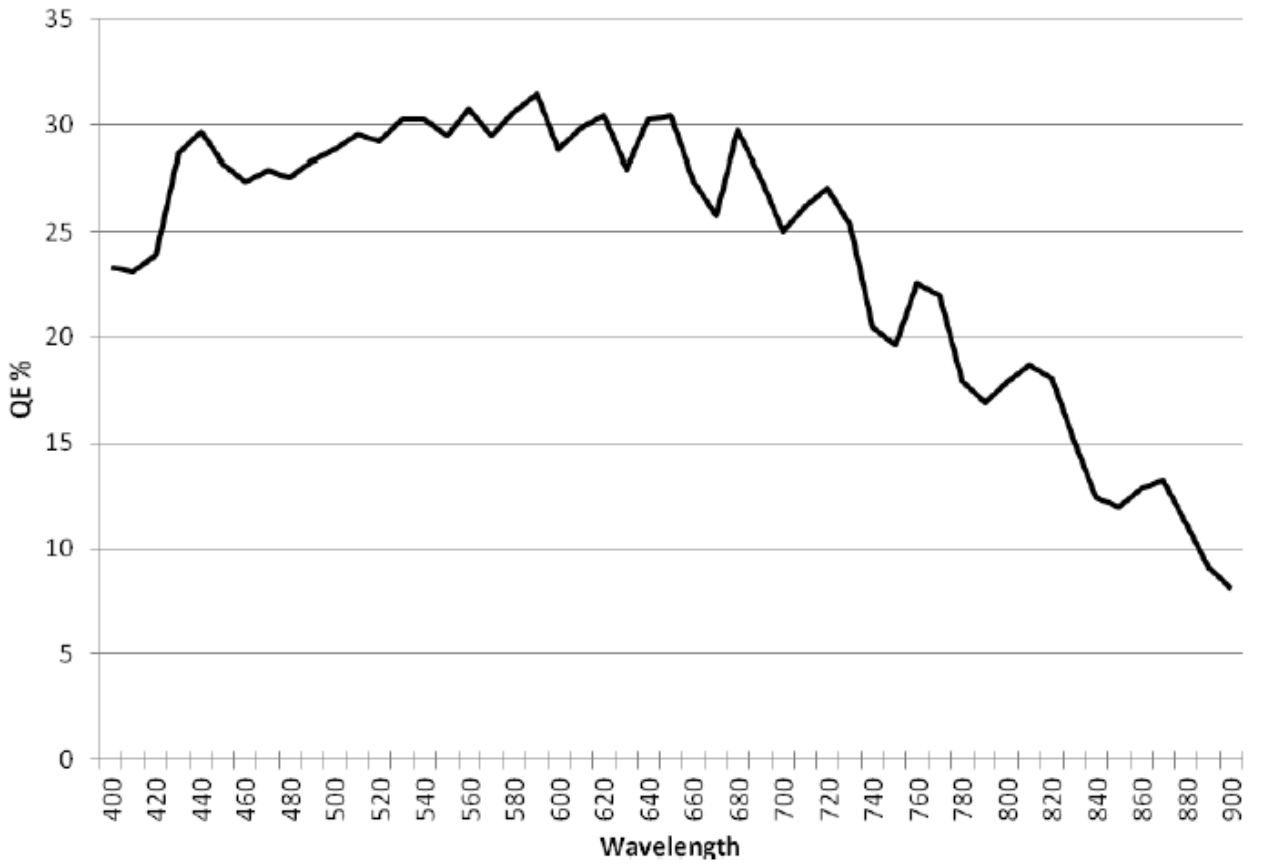

Allied Vision

Technical Drawing

Technical Drawing Front View

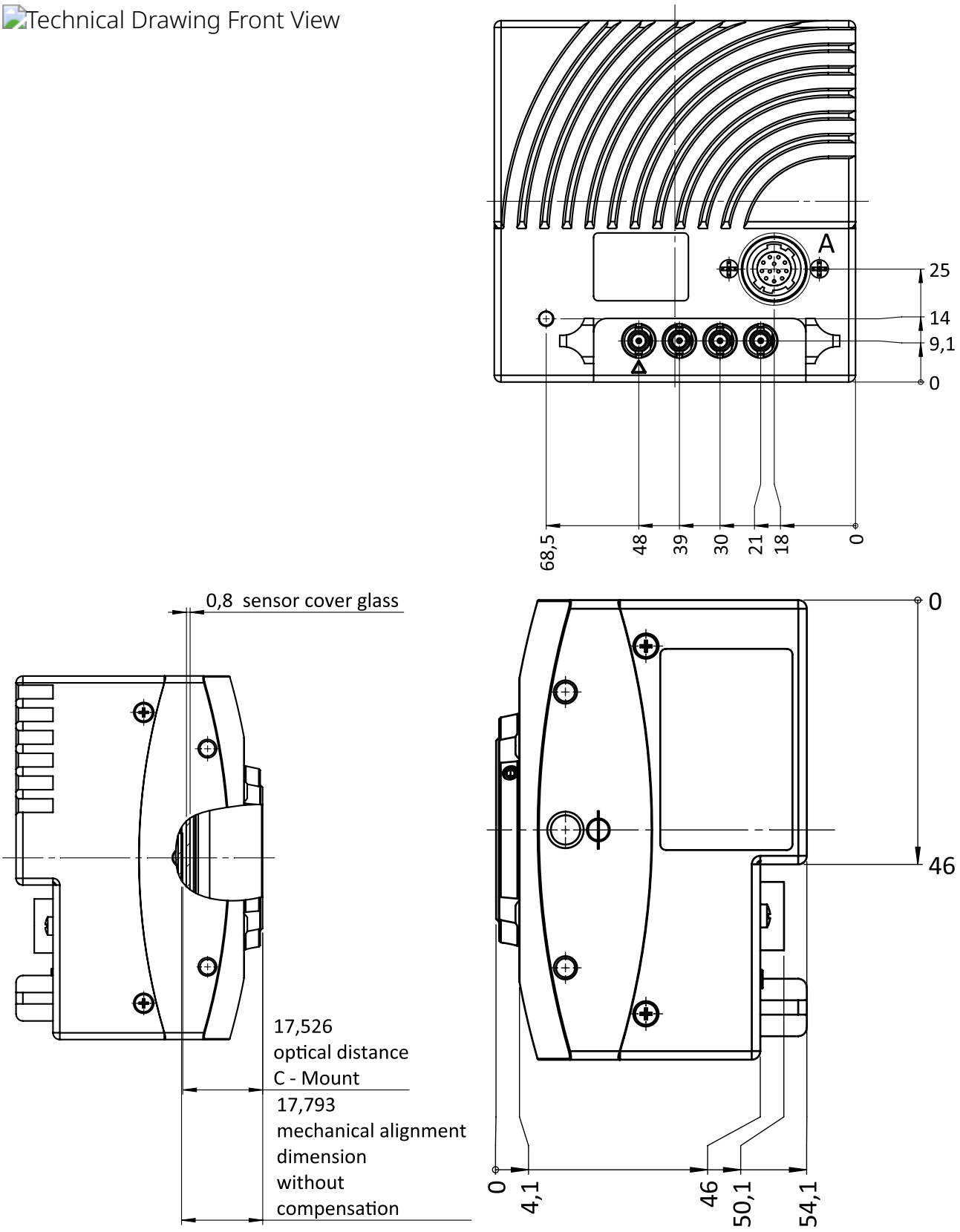

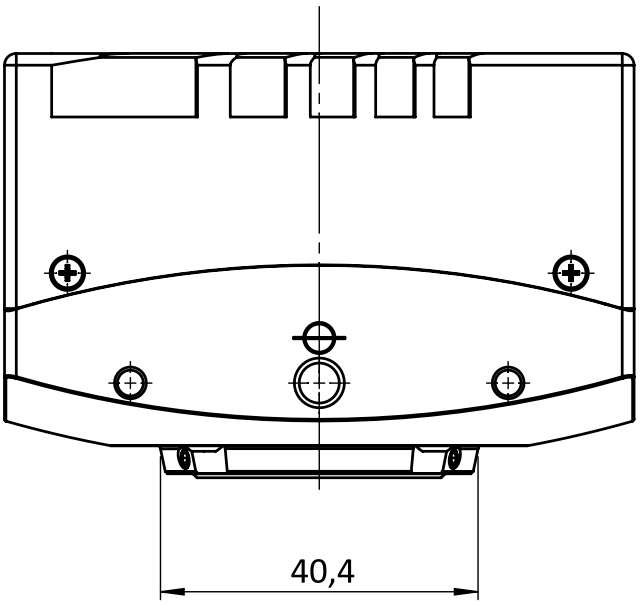

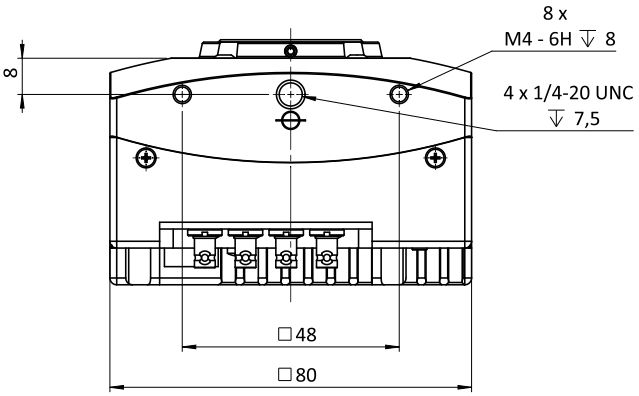

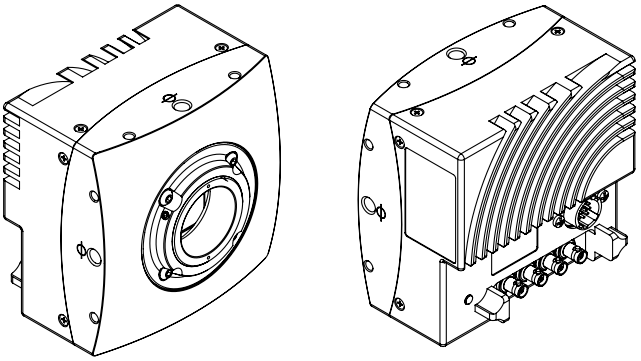

I/O pin assignment

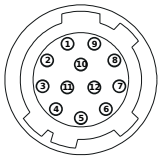

Pin	Signal	Pin	Signal
1 + 12	GND	6	IN0
2 + 11	VCC (12- 24 V)	7	IO_{GND}
3	IO_{GND}	8	OUT1
4	OUT0	9	IO_{GND}
5	IO_{GND}	10	IN1