Allied Vision

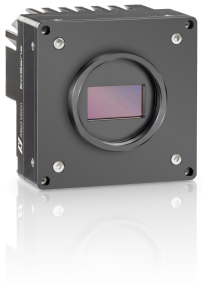

EoSens CoaXPress-12

EoSens10MCX12-M42

General

Model	EoSens10MCX12-M42
Product code	F006231
Product series	EoSens CoaXPress-12
Status	Available

Sensor

Sensor type	Area scan
Chroma	Mono
Spectrum	Visible
Spectral range	350 nm to 1000 nm
Resolution	4,608 × 2,176 (10.00 MP)
Sensor model	Gpixel GSPRINT4510
Sensor architecture (material)	cmos
Shutter type(s)	Global shutter (GS)
Sensor size	20.74 × 9.79 mm (22.93 mm, Type 4/3)
Pixel size	4.50 µm × 4.50 µm

Pixel formats

Sensor bit depth	8-bit, 12-bit
Monochrome pixel formats	mono8, mono12

Imaging performance

Dynamic range	68.8 dB

Timing and gain

Max. frame rate	482 fps

Allied Vision

Timing and gain

Max. frame rate ROI modes	4608 x 2176 | 478 fps,
Exposure time	1 µs to 1 s
Gain	0.0 dB to 12.0 dB

I/Os and power

Non-isolated lines	0 x LVDS input, 0 x LVDS output, 0 x TTL input, 0 x TTL output, 2 x 24V input, 0 x Open drain output,
Specific non-isolated lines	0 x RS232 input, 0 x RS232 output, 0 x RS422 input, 0 x RS422 output,
Opto-isolated lines	0 x Optical isolated input, 0 x Optical isolated input,
I/O connector	12-pin Hirose HR10A-10P-12S
Power supply	12 to 24VDC, Power over CoaXPress
Power consumption	External: 20 W (typical)

Operating conditions

Operating temperature	-10 °C to 65 °C (ambient, without condensation)

Mechanical properties

Body dimensions (L x W x H in mm)	55 × 80 × 80
IP class	IP30
Lens mount(s)	M42x0.75
Weight	630 g

Interfaces

Digital interface	cxp-12 with 4 connections
Interface connector	(micro-BNC)

FW features - image control

Exposure modes	external
Gain modes	digital, analog
White balance modes	true
Image control features	roi, mirror-image

FW features - camera control

Trigger modes/sync	external, trigger-over-cxp

Quantum Efficiency

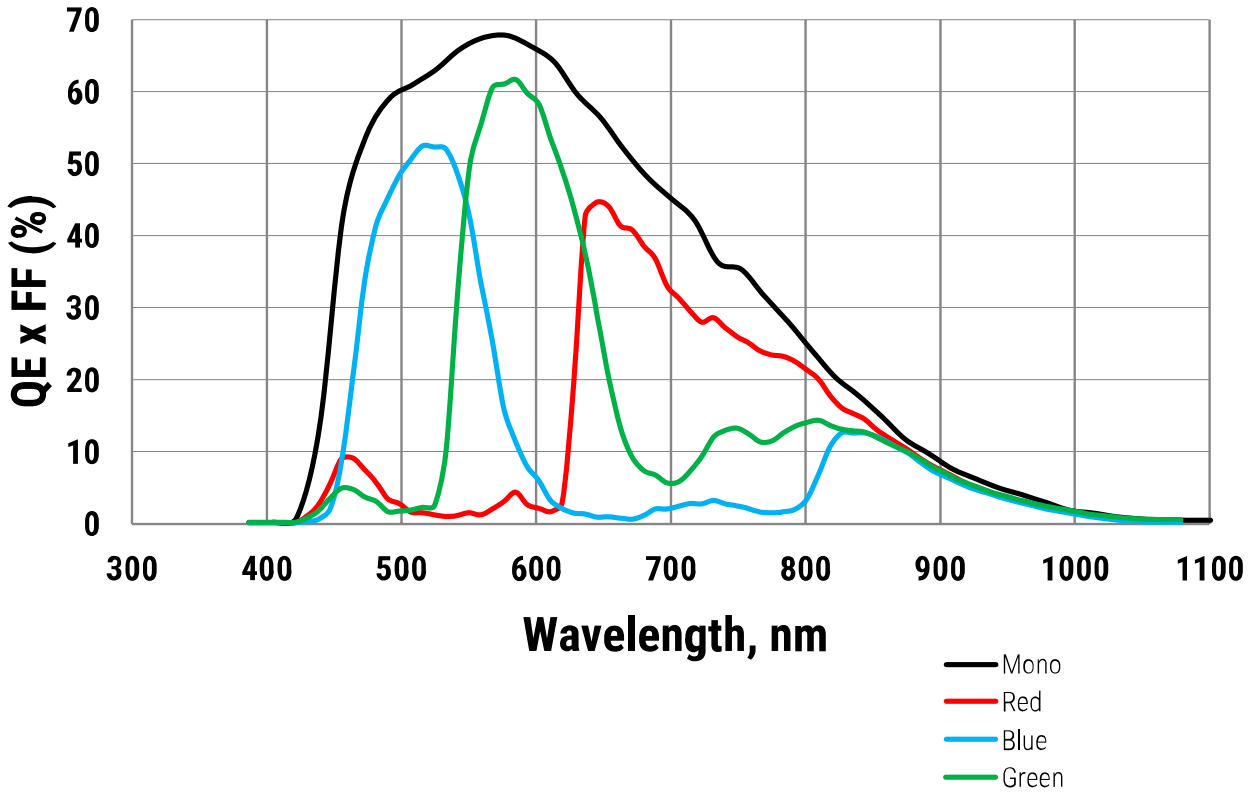

Allied Vision

Technical Drawing

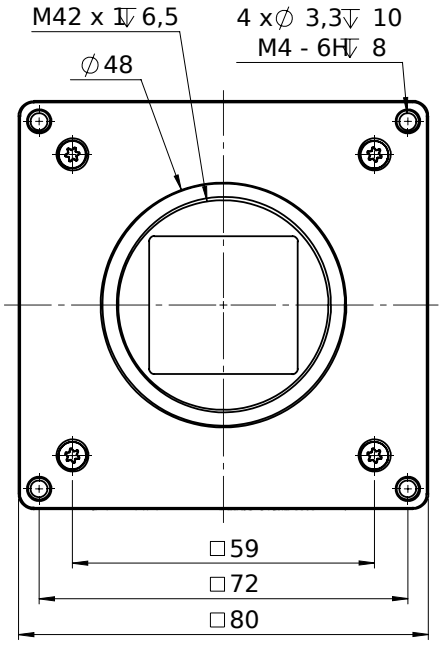

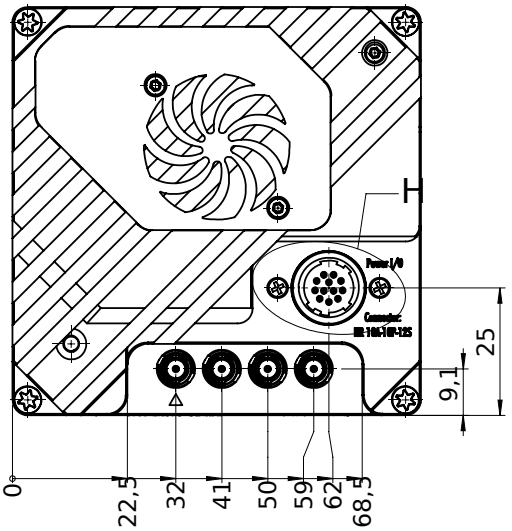

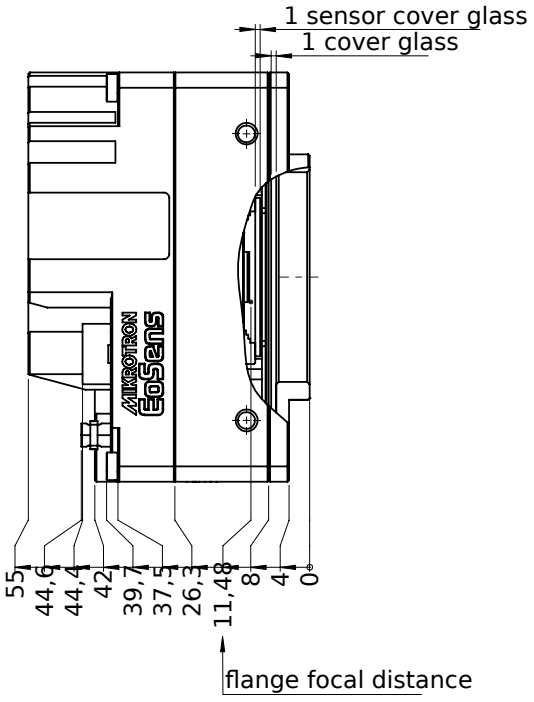

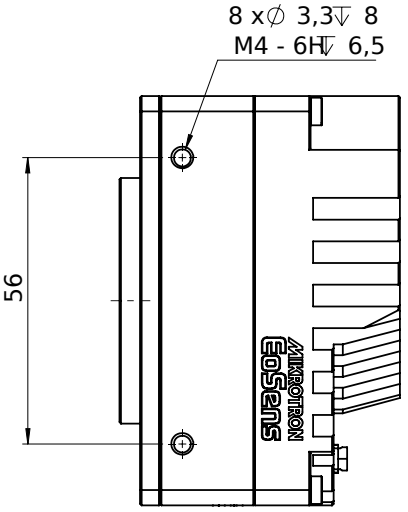

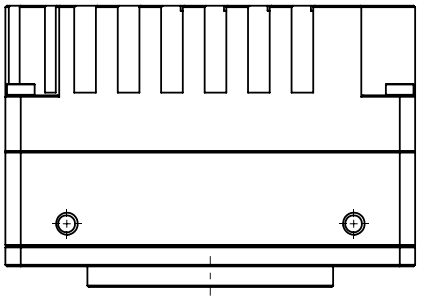

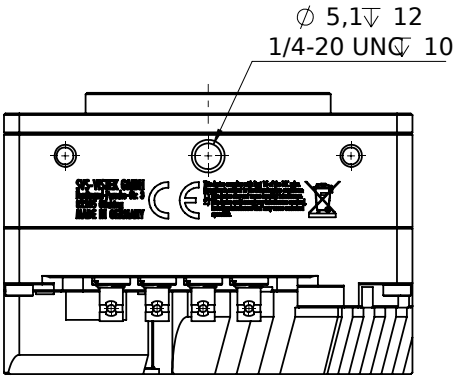

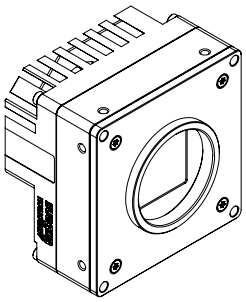

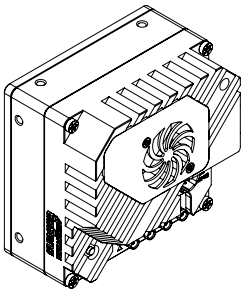

I/O pin assignment

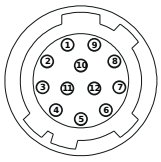

Pin	Signal	Pin	Signal
1 + 12	GND	6	IN0
2 + 11	VCC (12- 24V)	7	IO_{GND}
3	IO_{GND}	8	OUT1
4	OUT0	9	IO_{GND}
5	IO_{GND}	10	IN1